Simple and friendly

Kawasaki

Kawasaki Robot Controller
F0x Series Controller

Installation and Connection Manual

Robot

Kawasaki Heavy Industries, Ltd.

90202-1252DEI

Preface

This manual explains the work procedures for installing and connecting the controller and transformer unit (optional).

This manual explains the procedures for installing and wiring the controller and transformer unit (hereinafter, referred to as "the controller"), and connecting them to an external power supply. For other operations, see the "Operation Manual" and the "External I/O Manual."

Please make sure you have fully understood the content of this manual and ensured safety before performing work.

Furthermore, this manual only provides descriptions of the installation and connection procedures for the controller.
For information on installing and connecting the robot arm, see the "Installation and Connection Manual" for the arm.

This manual also covers optional devices.
However, in some cases, depending on the specification of the robot, not all of the optional devices are included.

[NOTE]

This manual is applicable to the following F0x Series controller models only.

F01, F02, F03, F04

There are two types of F0x controllers: A-type (model example: F02G-A***), B-type (model example: F02G-B***), and S-type (model example: F02G -S***).

A-type	Models compatible with the safety function "Cubic-S" as an option. (Incompatible with CoreCubic-S)
B-type	Models compatible with the safety function "CoreCubic-S" as an option. (Incompatible with Cubic-S)
S-type	Models compatible with the safety function "CoreCubic-S ver.2"and cybersecurity function (Incompatible with Cubic-S)

Since they are identical in appearance, specifications are not distinguished in the figures in this manual. (For details of Cubic-S and CoreCubic-S, refer to the separate "Cubic-S Instruction Manual" or “CoreCubic-S Instruction Manual.")

■How to check the controller model

To check the controller model, see the description in the “Model” field in the figure below.

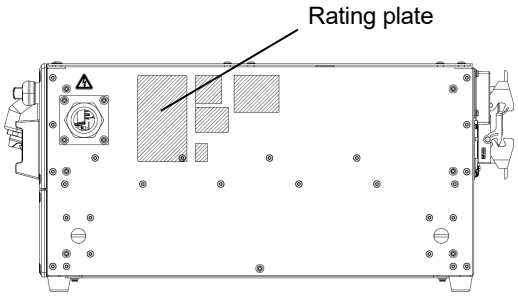

Right side of the controller

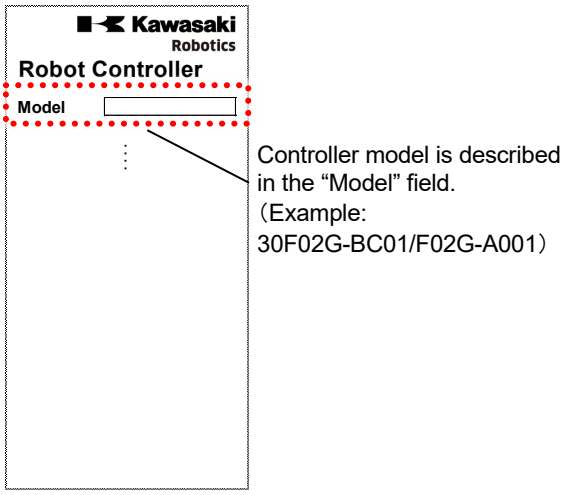

Rating plate (Example)

1. This manual does not guarantee the operation of the system with which the robot is used. Accordingly, Kawasaki is not responsible for any accidents, damage, and/or problems relating to industrial property rights as a result of using the system.
2. It is recommended that all personnel assigned for activation of operation, teaching, maintenance or inspection of the robot attend the necessary education/training course(s) prepared by Kawasaki, before assuming their responsibilities.
3. Kawasaki reserves the right to change, revise, or update this manual without prior notice.
4. This manual may not be reprinted or copied, in whole or in part, without the prior written consent of Kawasaki.
5. Store this manual with care and keep it available for use at any time. If the robot is reinstalled or moved to a different site or sold off to a different user, attach this manual to the robot without fail. In the event that the manual is lost or damaged, contact Kawasaki.

Copyright © 2021 Kawasaki Heavy Industries, Ltd. All rights reserved.

Symbols

The items that require special attention in this manual are designated with the following symbols.

Ensure proper and safe operation of the robot and prevent physical injury or property damage by complying with the safety matters given in the boxes with these symbols.

DANGER

Failure to comply with indicated matters can result in imminent injury or death.

WARNING

Failure to comply with indicated matters may possibly lead to injury or death.

CAUTION

Failure to comply with indicated matters may lead to physical injury and/or mechanical damage.

[NOTE]

Denotes precautions regarding robot specification, handling, teaching, operation, and maintenance.

WARNING

1. **The accuracy and effectiveness of the diagrams, procedures, and detail explanations given in this manual cannot be confirmed with absolute certainty. Should any unexplained questions or problems arise, please contact your nearest Kawasaki.**
2. **Safety related contents described in this manual apply to each individual work and not to all robot work. They are not applicable to other general items or other matters.**
3. **In order to perform work safely, read the "Safety Manual" before using the robot, and gain a full understanding of all pertinent laws, regulations and related materials as well as all the safety explanations described in each chapter, before correctly preparing a safety system suitable for the use of the robot at your company.**

Introductory Notes

■ Hardware keys and switches (buttons)

In the F0x Series Controller, hardware keys and switches for performing the various operations are provided on the robot controller operation panel screens and the teach pendant. In this manual, they are indicated as follows.

- The names of the hardware keys and switches are enclosed with a square.
- For brevity, only the names are indicated in some cases.
- When two or more switches are to be pressed together, the switch names are given in pressing order, with a plus sign between them.

Example	
ENTER:	expresses the hardware key "ENTER."
TEACH/REPEAT:	indicates the "TEACH/REPEAT" mode selector switch on the operation panel.
A + MENU:	indicates pressing and holding down "A" and then pressing "MENU."

■ Software keys and switches

In the F0x Series Controller, software keys and switches for performing the various operations are displayed on the teach pendant screen according to the specification and status. In this manual, they are indicated as follows.

- The names of the software keys and switches are enclosed in parentheses <...>.
- For brevity, only the names are indicated in some cases.

Example	
<ENTER>:	"ENTER" key that appears on the teach pendant screen
<Next Page>:	"Next Page" key that appears on the teach pendant screen

■ Items

Various items appear for the operations on the teach pendant screens.
In this manual, they are indicated as follows.

- The names are enclosed in brackets [...].
- When selecting an item, it is necessary to align the cursor to a given item and then press the ↵ key. For brevity, this is sometimes expressed as "select […]".

Example	
[Aux. Function]:	expresses the item "Auxiliary Function" in the menu.

■ Shortened names

- For brevity, "teach pendant" may be expressed as "TP."
- For brevity, "function key" may be expressed as "F key."

Table of Contents

Preface i
Symbols iii
Introductory Notes iv
1 Safety 1
1.1 Transporting, Installing and Storing the Controller 1
1.2 Controller Installation Environment 2
1.3 When Connecting a Harness 5
1.4 When Connecting an External Power Supply 6
1.5 Warning Labels 9
1.6 Use and Disposal of Fuses and Batteries 16
1.7 Safety Specification 19
1.8 Arm Movement without a Motor Driven Power Supply (During Emergencies or in Abnormal Situations) 20
2 Workflow to be Followed When Installing and Connecting the Controller 25
3 Controller External Appearance and Specifications 26
3.1 External Appearance of Controller 26
3.2 External Appearance of TP 30
3.3 F0x Controller Specifications 31
4 Transporting the Controller 33
4.1 Lifting with Wire 33
4.2 Transportation by Two People 35
5 Placement of the Controller 36
5.1 Horizontal Placement of the Controller 36
5.2 Vertical Placement of the Controller 38
5.3 Tap Positions on the Side of the Controller 40
6 Connecting the Controller to the Robot Components 43
6.1 Connecting the Controller to the Robot 43
6.2 Connecting the Controller to the TP 59
7 Connecting an External Power Supply 63
8 Peripheral Control Machinery and Equipment Connection 76
8.1 Cautions to Observe When Connecting 76
8.2 General Purpose Signal Connection 81
8.3 Hardware-Dedicated Signal Connection 81
8.4 Safety Signal Connection 81
8.5 PC Connection 81
8.6 RS-232C Serial Signal Connection (Optional) 82
8.7 Ethernet Communication Signal Connection 82
8.8 Fieldbus Connection (Optional) 82

1 Safety

This chapter explains safety matters relating to the installation and connection of the controller. For other safety matters, refer to the separate "Safety Manual."

Note For details of Cubic-S and CoreCubic-S, refer to the separate "Cubic-S Instruction Manual" or “CoreCubic-S Instruction Manual."

1.1 Transporting, Installing and Storing the Controller

When installing the Kawasaki Robot controller, perform transportation, installation and storage work in strict observance of the following cautions.

[NOTE]

Ensure that installation work is carried out by qualified personnel and in compliance with safety laws and standards for the given country and/or region.

⚠ CAUTION

1. **During transportation, installation, and storage, be sure to observe the following points.**
   The controller consists of precision electronic parts.
   (1) Ambient storage temperature: -10 to 60°C
   (Ambient operating temperature: 0 to 45°C)
   Note See "3.3 F0x Controller Specifications."
   (2) Relative humidity: 35 to 85% RH (there must be no condensation)
   (3) Do not subject the equipment to excess impact, shock, or vibration.
   Note For vibration conditions during operation, see "3.3 F0x Controller Specifications."
2. **Prior to beginning the work of installing the controller, be sure to remove any obstacles that may prevent smooth and safe installation.**
3. **If transporting the controller to the installation location using a crane or forklift, first ensure there is adequate room for passage.**

⚠ WARNING

If the TP is not connected to the robot controller, the EMERGENCY STOP switch on the TP is disabled. To avoid confusion with an enabled EMERGENCY STOP switch, implement the following measures.

1. **Store any TP that is not connected to the robot controller in a location sufficiently far from the robot controller so that it is clearly identifiable as not connected.**
2. **Users should prepare an appropriate storage location for unconnected TPs.**

1.2 Controller Installation Environment

Install the controller in a location which can deliver the following ambient environmental conditions.

1. Ambient temperature: The ambient temperature must be within a range of 0 to 45°C.
2. Relative humidity: Relative humidity must be 35% to 85% RH.
   (In addition, there must be no condensation.)
3. Elevation: 0 to 1,000 m above sea level
4. Environmental conditions relating to foreign objects
   - The pollution degree must be 3 or lower (in addition, there must be no condensation)*1
     * 1 The pollution degree is specified in IEC60664-1.
     Regarding the protection rating of controller under IEC60529, see the figure below.

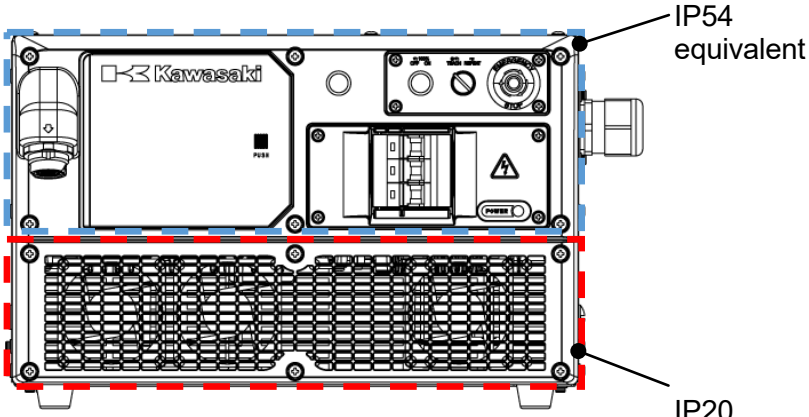

F0x controller

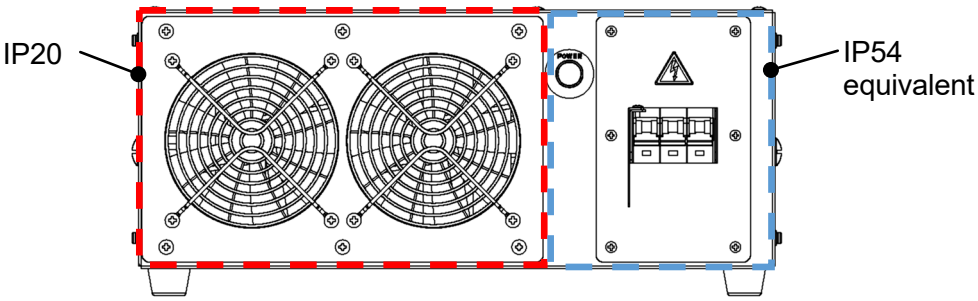

Transformer unit

CAUTION

- **It may not be possible to guarantee an adequate level of resistance against oil. Oil must not come into contact with the controller, and it must not be used in an environment where oil mist is suspended in the air.**
- **If using in environments in which there is water or oil, take appropriate measures to ensure no water or oil is splashed onto the controller.**
- **Avoid use in environments with large amounts of metal particles, as such particles may fall directly onto the controller.**
- **To ensure the controller is sealed, close the top plate and accessory panel cover when using. Also, do not use when the metal plate attached to the rear of the controller has been removed. Use a cable entry to route wiring from the circuit board located inside the controller, etc. See "8.1 Cautions to Observe When Connecting" for instructions on using cable entries.**

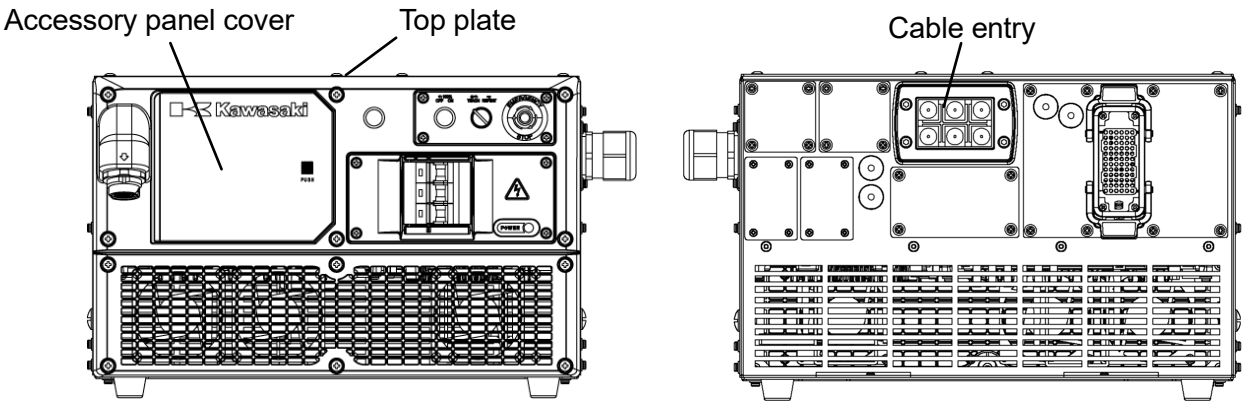

- Close the top plate when using the transformer unit. (To ensure it is sealed.)

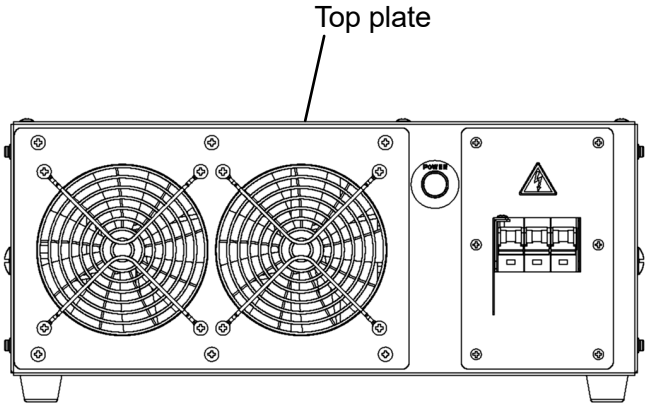

5. Installation location
   - The location must have good electrical noise conditions.
     Controller external power supply noise: 1 kV/1 μs or less

CAUTION

For equipment which produces high levels of electrical noise such as electromagnetic contactors, electromagnetic brakes, electromagnetic solenoids, and induction motors installed near the installation site, use an appropriate surge protector to suppress any generated noise.

   - The location must have no flammable or corrosive fluids or gases, etc. (example: hydrogen sulfide, etc.)
   - The location must not be subject to excess shock, impact, or vibration.
   - The location must satisfy the required power supply specifications for robots.
     Variability: ±10% or less
   - The location must be able to support dedicated class D grounding for robots.

6. Safety fence installation conditions
   - Install the safety fence with an allowance of at least 1 m beyond the motion range of the robot (including tools and workpieces, etc.).
   - When installing the safety fence, bear the following points in mind.
     - Ensure sufficient space to allow the controller to be easily accessed for maintenance.
     - Install a door with a safety plug on the safety fence.
     - For more detailed information regarding safety fences, refer to the relevant requirements for your region
       (ISO 13854 to 13855, 13857, 14119 to 14120, etc.)

CAUTION

Do not install the controller within the motion range of the robot, or within the cell or the safety fence.

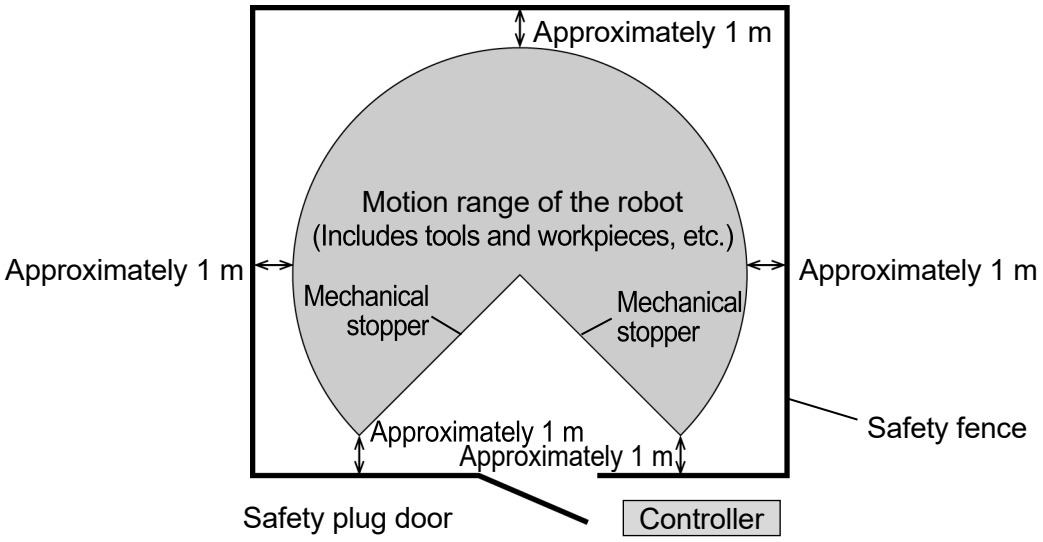

1.3 When Connecting a Harness

When connecting the controller to the robot, strictly observe the following cautions.

WARNING

To prevent electric shocks, do not connect the external power supply until the connection between the robot and the controller is complete.

CAUTION

1. **When connecting a harness, make sure the connector is connected at the correct point.**
   Forcing a connection may lead to connector damage or electrical system failure.
2. **Do not place anything on top of the harness or place it in a position where it could be walked on or driven over (with a forklift etc.).**
   Stepping on or running over the harness could damage it or cause electrical system failure.
3. **Keep the harness separate from the robot wiring and from high voltage power lines.**
   (1) **Do not wire the harness close to or in parallel with other power lines.**
   (2) **Do not bundle the wires.**
   (3) **Keep the wiring at least 1 m clear of high voltage or current power lines.**
   Failure to do so may lead to malfunctions caused by noise from the power cables.
4. **Even if the harness is long, be sure to avoid winding, bending, or bundling the cables/wires.**
   Bundling prevents generated heat from escaping, causing the harness to overheat. This could damage the cables and cause a fire.

1.4 When Connecting an External Power Supply

When connecting an external power supply, strictly observe the following cautions.

DANGER

1. **Before connecting an external power supply, make sure that the external power supply for the controller is turned OFF. Connecting while powered on could cause an electric shock.**
2. **Until the external power supply connection is completed, put a tag on the breaker indicating that work is in progress or assign another technician for supervision to ensure that the breaker will not be turned ON.**

WARNING

1. **Check that the specification of the power supply connected to the controller is the same as the stated specification on the rating plate. Connecting power supplies with different specifications may cause the internal electrical components to fail.**
2. **Always provide grounding as a countermeasure against electric shock and noise.**
   (1) **Dedicated grounding:**
   Dedicated class D grounding with a resistance of 100 Ω or less
   (2) **Recommended power cable size:**
   Ground wire of 3.5 to 5.5 mm² or more
   (For details, see "3.3 F0x Controller Specifications.")
3. **Grounding should never share ground wires or negative electrodes (base material) with welding machines, etc.**
4. **Be sure to observe the following when arc welding.**
   (1) **Connect the negative electrode (base material) on the power supply used for welding directly to the base material or to the jig.**
   (2) **Never have the main robot unit and the controller share grounding, and ensure they are grounded in isolation of each other.**
5. **Before turning on the external power supply, ensure that the power supply for the controller is connected securely, and that all covers are mounted correctly. Failure to do so could lead to electric shock.**

⚠ CAUTION

1. **Be sure to use an external power supply which meets the specifications of the controller for instantaneous power interruptions, voltage fluctuations and capacity, etc.**
   Connecting a power supply with a different specification could cause the power supply to be turned OFF by the power supply monitoring circuit, leading to an error. Especially when using a transformer unit, the instantaneous high load of the robot is more likely to cause decreases in controller power supply voltage. If errors such as a power decrease error occur when the robot is under high load, recheck the primary power supply voltage supplied to the transformer unit and the connection tap inside the transformer unit.
2. **If there is a risk of noise from the external power supply becoming mixed in, reduce the noise level by adding a noise filter or similar.**
3. **Check first that there are no devices with poor noise tolerance in the vicinity.**
   Devices with poor noise tolerance can malfunction due to the effects of PWM noise generated by the robot motor.
4. **The robot's external power supply switch (breaker) should not be used in combination with welding machines or other power equipment.**
5. **To prevent electric leakages, a time-delay electric leakage breaker (with a current sensitivity of 100 mA or higher) should be used as the external power supply switch.**
6. **If there is a risk of voltage surges from the external power supply such as those caused by lightning surges, reduce the surge voltage level by adding a surge absorber or equivalent.**
7. **The surge protection device (SPD) used for the equipment must be compliant with NFPA79.**
8. **In the case of controllers with a regenerative charging function (if using an F03 controller or optional regenerative charging function), the peak values for voltage between the AC wires of the secondary breaker inside the controller that are shown in the following table may increase when the power supply breaker (NFB in the following figure) that supplies AC power to the controller during robot operation is cut off. Be aware of this if you have devices that share power with the controller from the same breaker.**

Power supplied to the controller		Peak voltage (V) between wires at point A (400 V system)	Peak voltage (V) between wires at point B (200 V system)
(1) Without transformer unit (Note When AC200-220 V)		380 V for 10 ms or less	380 V for 10 ms or less
(2) With transformer unit	When the power supply tap inside the transformer unit (X601 connector) is set to the 380 V-415 V side	700 V for 10 ms or less	
	When the power supply tap inside the transformer unit (X601 connector) is set to the 440 V-480 V side	800 V for 10 ms or less	

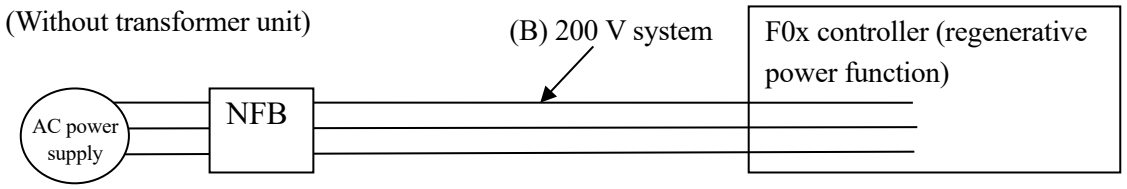

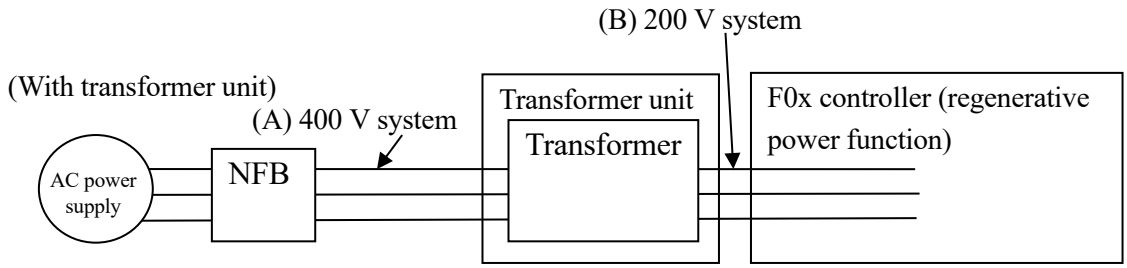

1.5 Warning Labels

Electric shock and high temperature warning labels are affixed in the positions shown in the drawings below.

■F01 controller

1 2

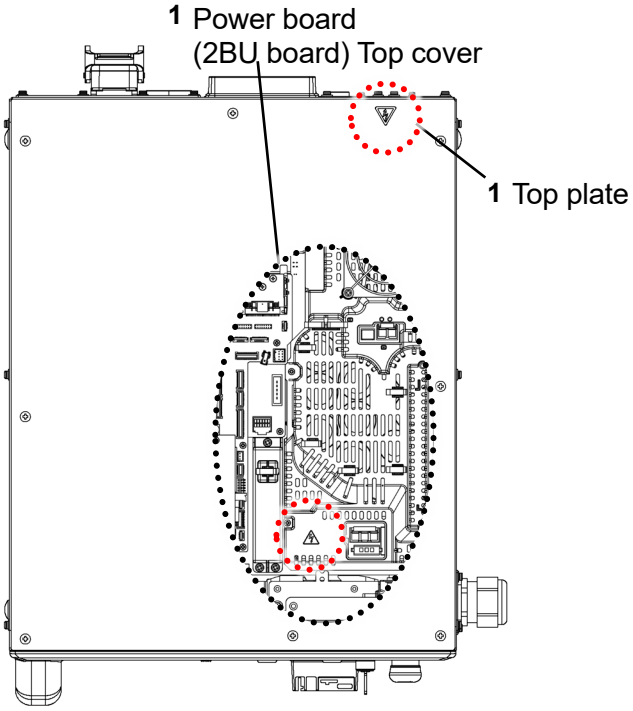

Top

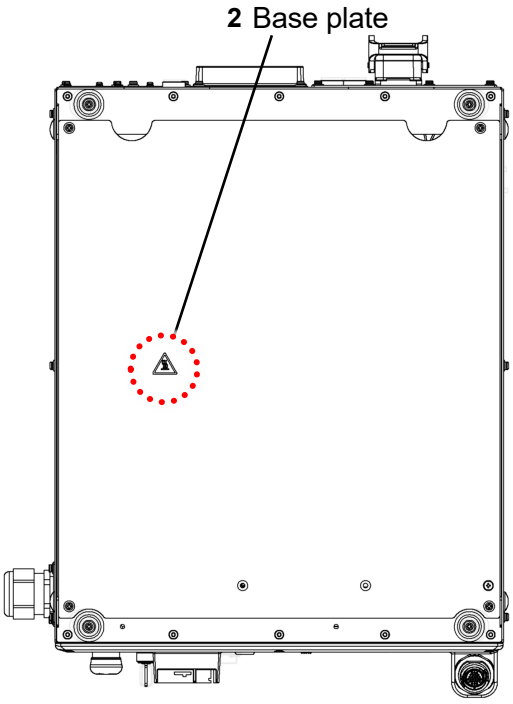

Bottom

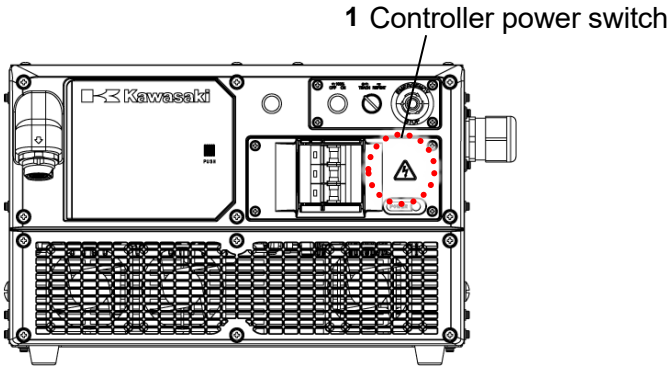

Front

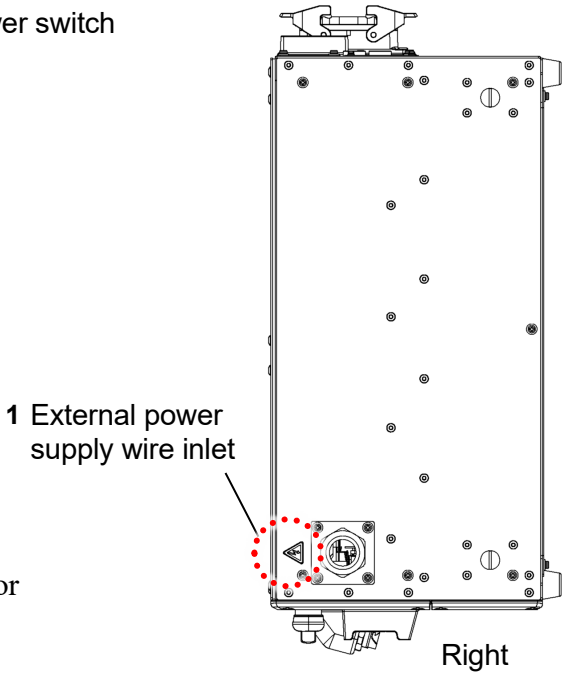

Right

Note The location of the labels is the same for F02/F03/F04 controllers.

■Transformer unit

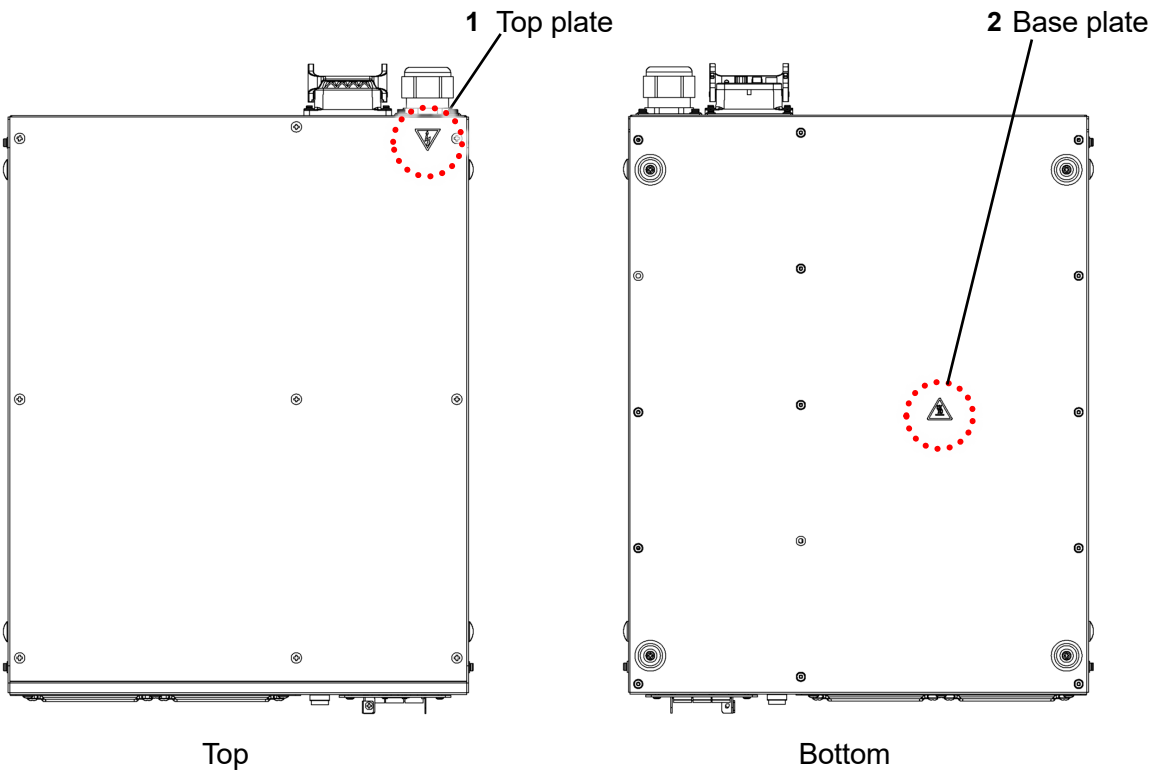

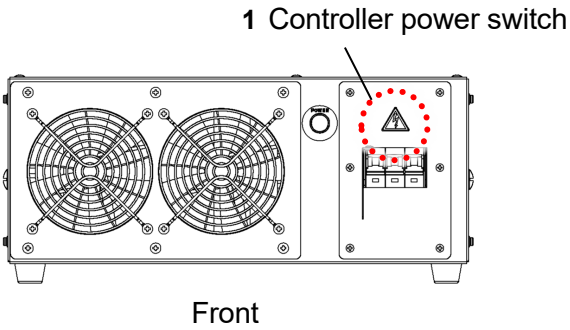

■Arm base connector plate

YF003N

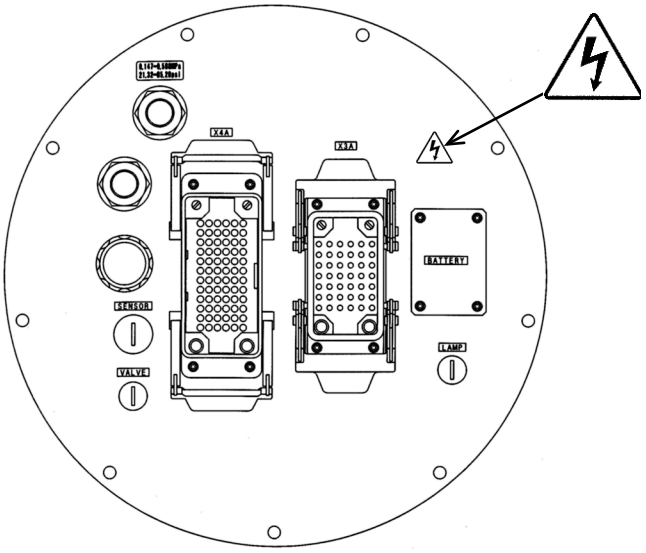

YF002N

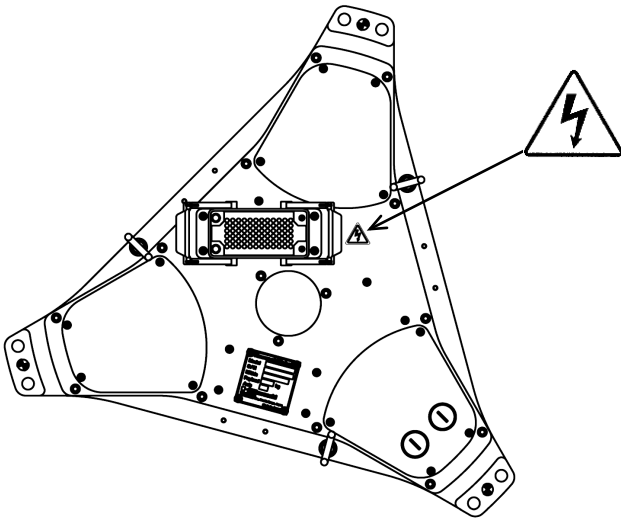

R Series 007N/007L

RS007N-A/RS007L-A

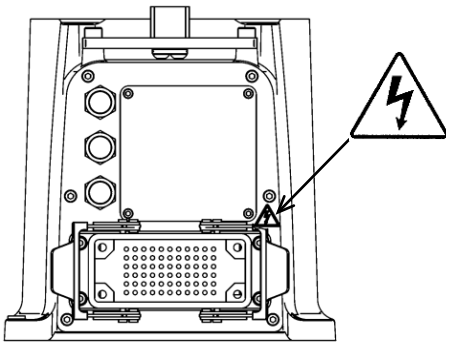

RS007N-B/RS007L-B

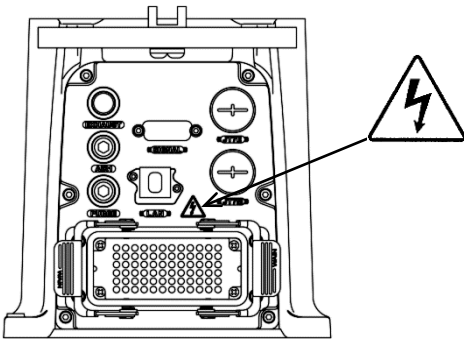

R Series 010N/006L

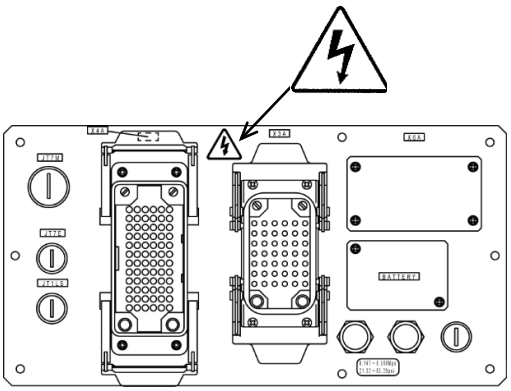

R Series 013N

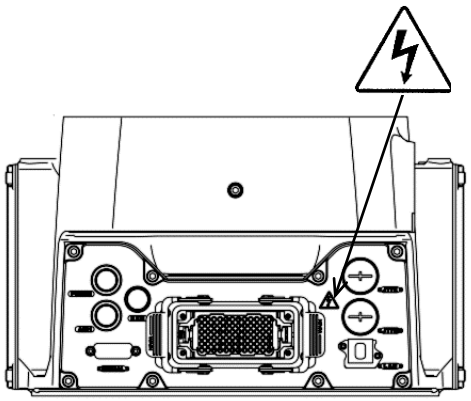

R Series 020N/010L

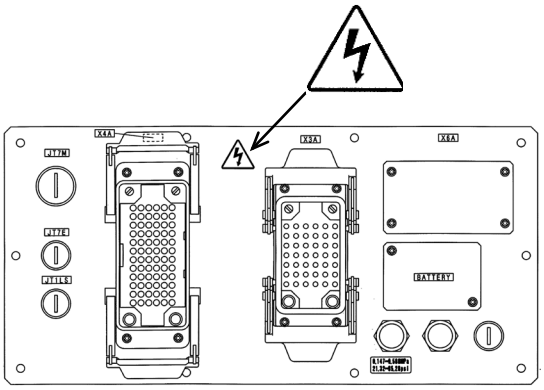

R Series 025S/025N

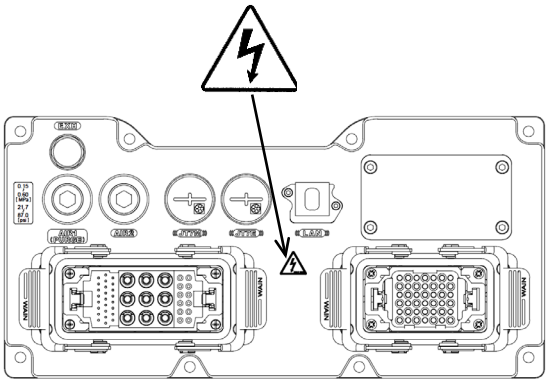

R Series 030N/050N/080N/015X

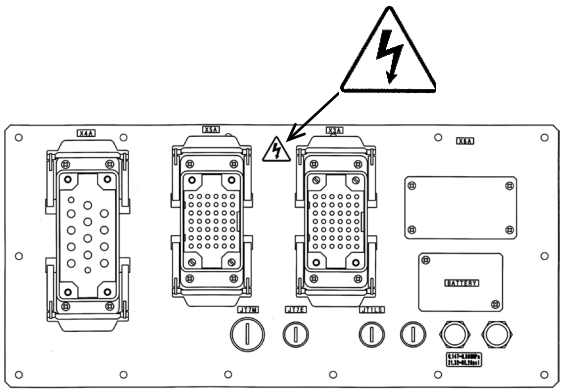

RD Series 080N

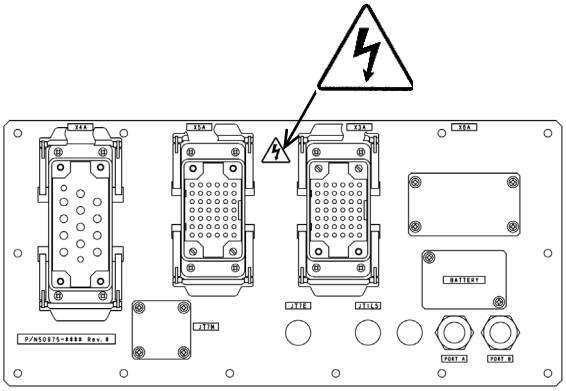

ZH Series

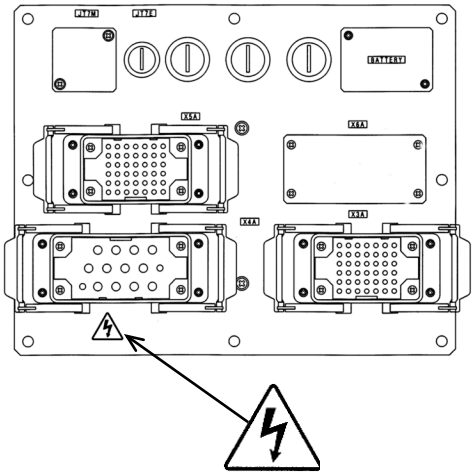

ZX/ZT Series

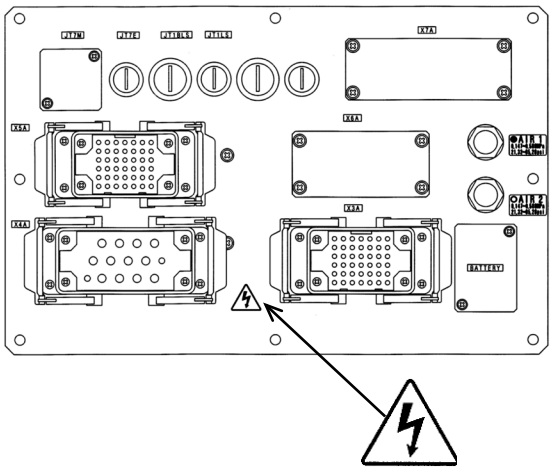

MT Series

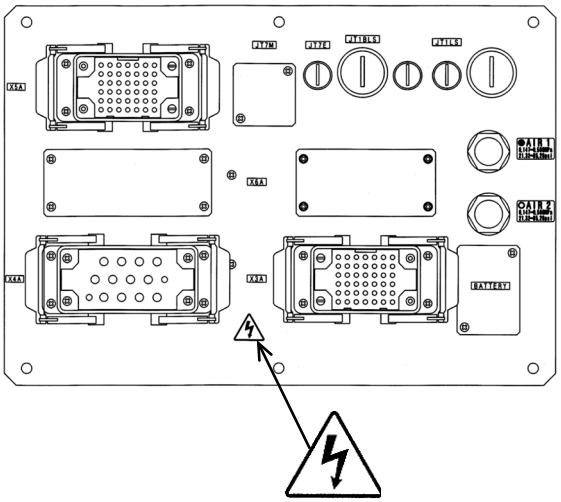

B Series

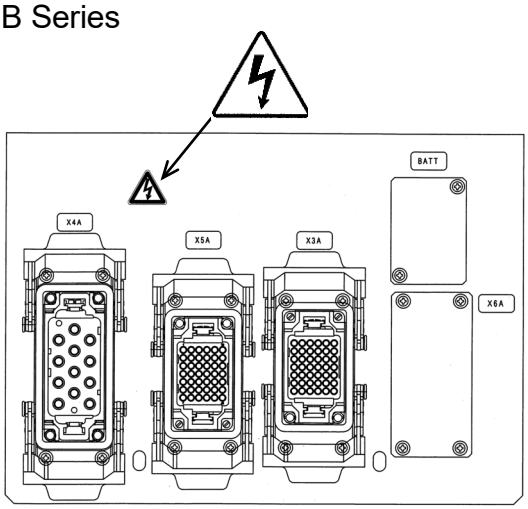

MX Series

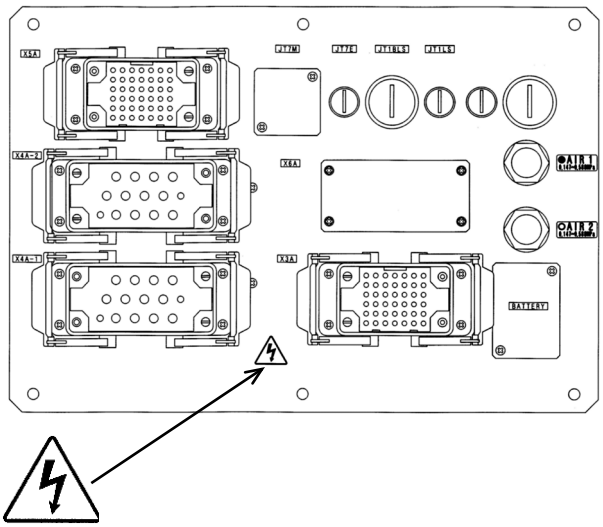

BXP Series

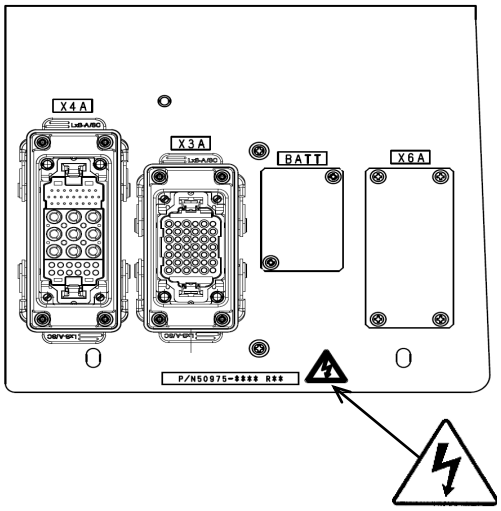

BA Series 006N/006L

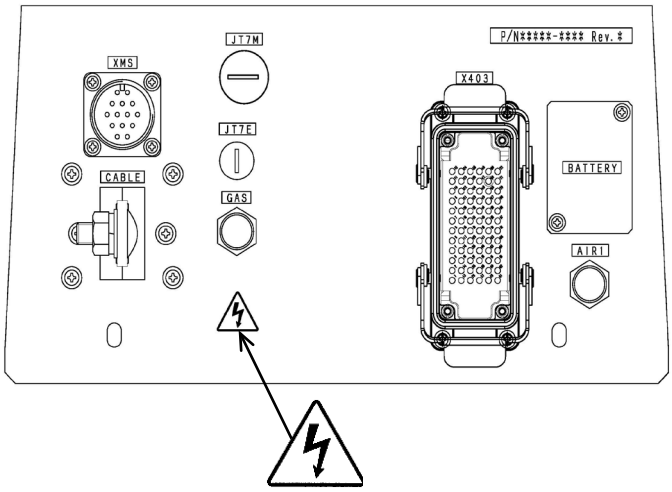

BA Series 013N

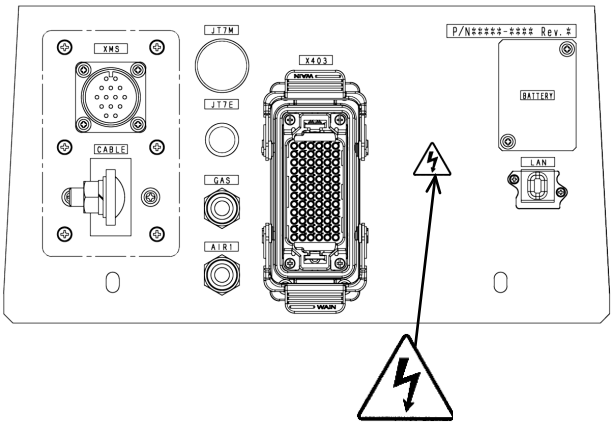

BA Series 013L

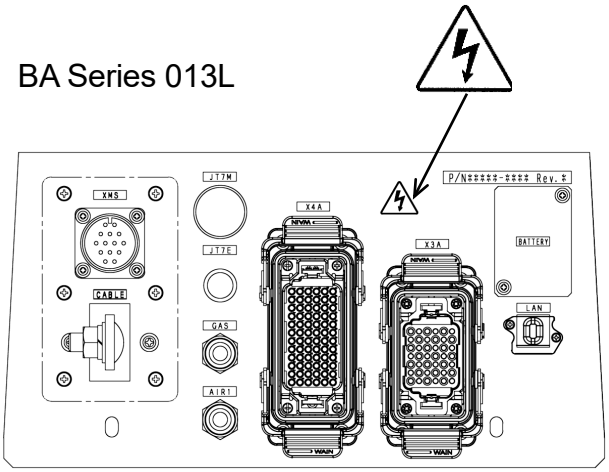

CP Series (CP110L)

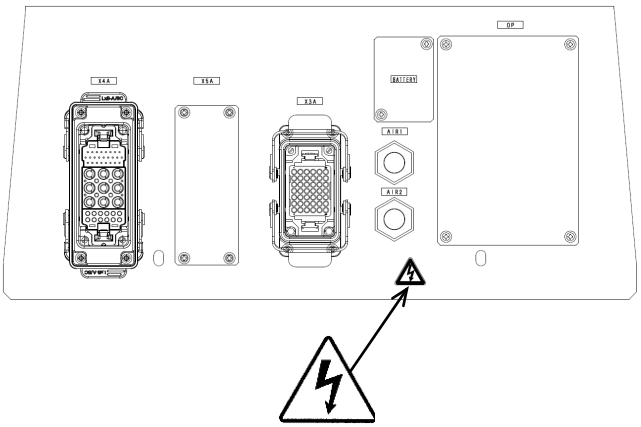

CP Series (excluding CP110L)

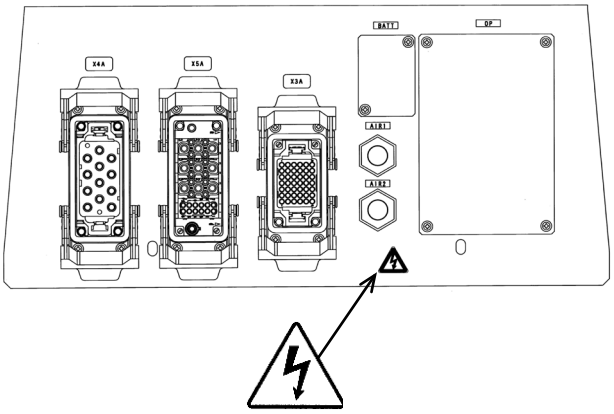

BU015N

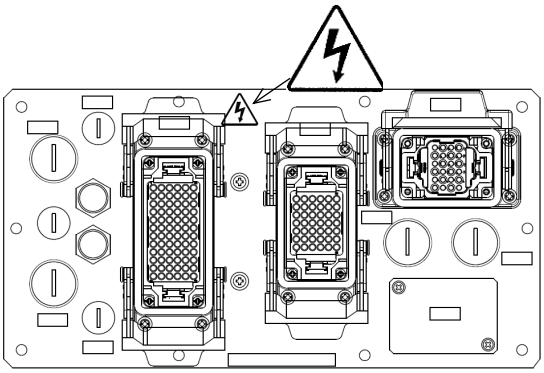

BU015X

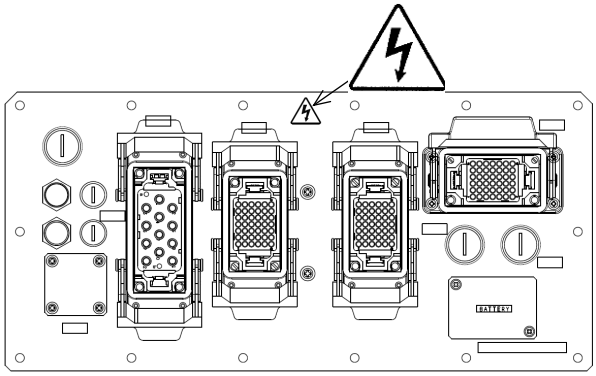

MXP360L

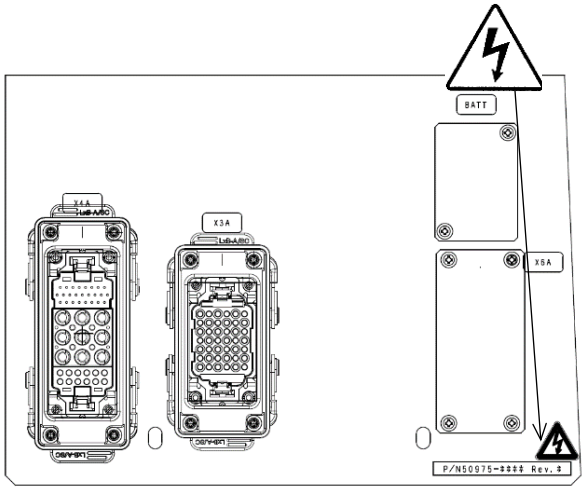

MXP Series (excluding MXP360L)

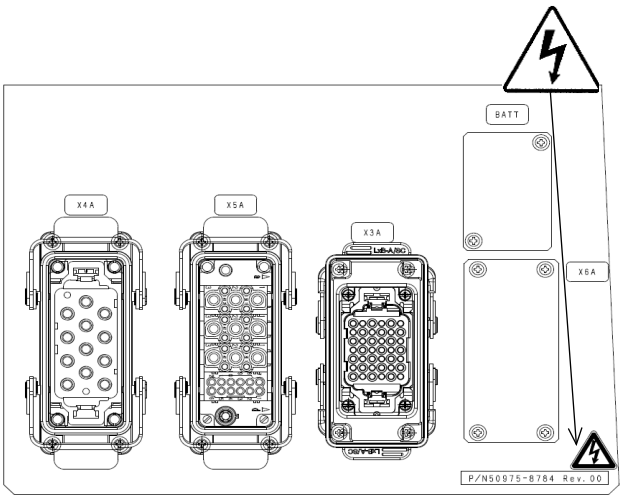

1.6 Use and Disposal of Fuses and Batteries

Within the robot arm and the controller, various batteries are used for data back-up. Misuse or mishandling of batteries may not only cause malfunctions, but may also lead to ignition, heating, rupture, corrosion, leakage etc. The following cautions should be strictly observed.

WARNING

1. **Only use the batteries specified by Kawasaki.**
2. **Do not charge, disassemble, modify or heat the batteries.**
3. **Do not dispose of batteries in fire or water.**
4. **Do not use batteries with surface damage.**
   Doing so might cause them to short internally.
5. **Do not allow metal objects such as wires, etc. to short the positive and negative terminals on the batteries.**

CAUTION

Do not dispose of no longer needed batteries along with other garbage disposed of in landfills.
When disposing of batteries, insulate them with tape or something similar so that they do not touch other metal objects, and be sure to follow any local ordinances or regulations.

■Battery mounting location

The positions of the batteries on the 2AA board and the 1HG board are shown below.

- 2AA board
  Location Number: E1
  Part Model: BR2032
  Manufacturer: Panasonic

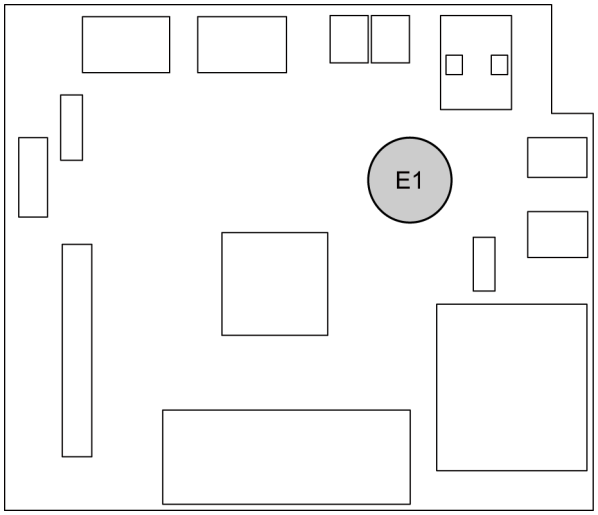

- 1FG board (inside robot base)
  Location Number: BAT1
  Part Number: 50750-1007 or 50750-1018
  Manufacturer: KHI
  Connector: CN10

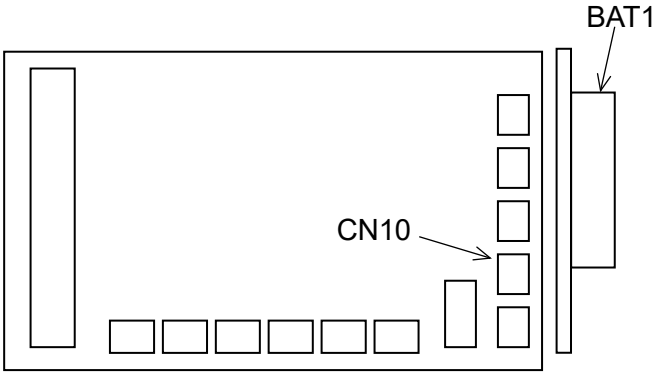

- 1HG board (inside robot base)
  Location Number: BAT1
  Part Model: 50750-1007 or 50750-1018
  Manufacturer: KHI
  Connector: CN3

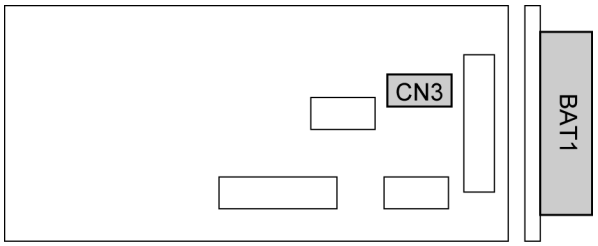

- Replacement method
  It is possible to replace by simply removing the small plate labeled "BATTERY."

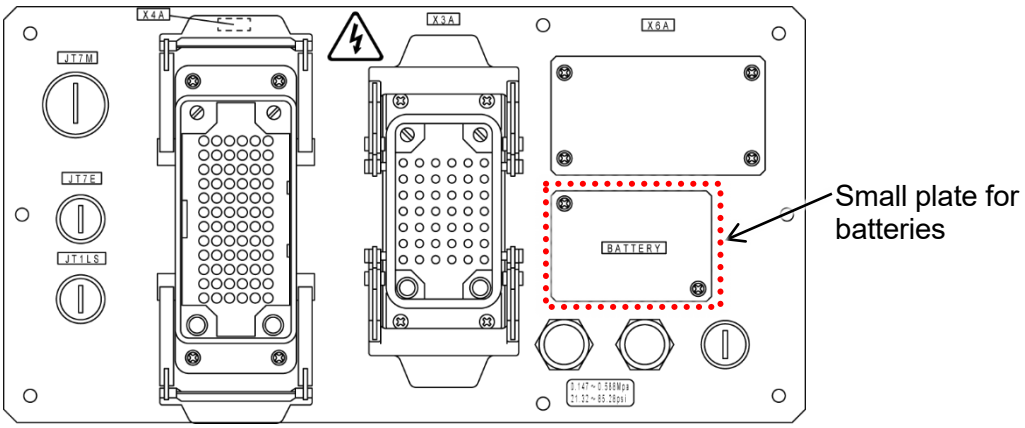

1.7 Safety Specification

To ensure user safety, Kawasaki's robot systems are equipped with the following features.

1. All emergency stop switches are hard wired.
2. A dual-system safety circuit is installed on this controller.
   Both safety circuits must be connected in order to operate the robot in teach and repeat modes. For details, see the "External I/O Manual."
3. The controller safety circuits satisfy ISO 13849-1 category 4 PLe requirements.
   The category and PL are determined on a system-wide basis.
4. For arms equipped with a servo ON lamp, the servo ON lamp will light up when motor power is supplied.
5. Emergency stop switches are equipped to the TP and operation panel.
   External emergency stop inputs are also available.
6. TP is equipped with three position enabling switches.
   It is necessary to push and hold down the enabling switch to operate in either teach or check mode.
7. The maximum TCP speed in teach mode or check mode is restricted to 250 mm/s (10.0 in/s).
8. The optional Fast Check mode switch enables a speed limit of 250 mm/s (10.0 in/s) or more during check operations. (Based on ISO 10218-1)
9. Enabling Cubic-S or CoreCubic-S functions allows you to use their respective safety functions. For details on each safety function, refer to the separate "Cubic-S Instruction Manual" or “CoreCubic-S Instruction Manual."

WARNING

If the robot is operated using the Fast Check function, have all personnel exit from the safety protection area and perform checks from outside the safety fence.

1.8 Arm Movement without a Motor Driven Power Supply (During Emergencies or in Abnormal Situations)

During emergencies or in abnormal situations, the (optional) brake release switch can be used to move the arm without a motor-driven power supply.

- Brake release switch box (optional)

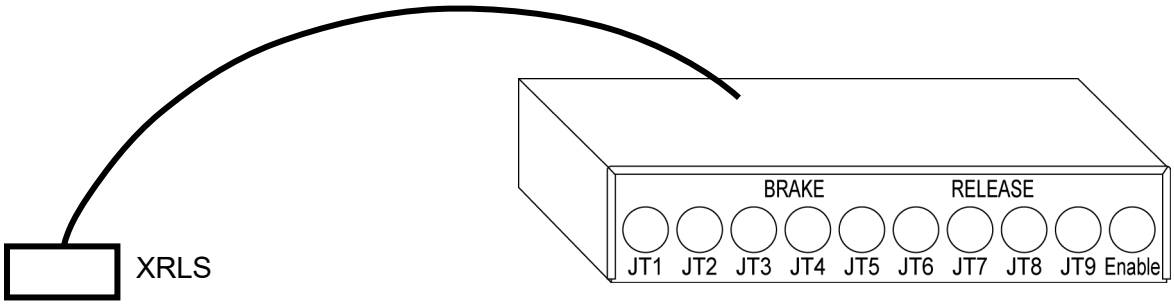

Part number
- Non-CP Series: 50818-0067
- For CP Series: 50818-0068

■Precautions

If no motor driven power is supplied to the arm, the electromagnetic brakes lock in order to maintain the posture of the robot. There is a possibility that unsupported axes may fall when the brake release switch is pressed.
Note that depending on conditions, the overhanging axes (especially axes JT2 and JT3) will drop the fastest.

⚠ WARNING

When operating the switch, stand in a position where you are able to see the entire robot, and keep your attention focused on the arm at all times.

■Work procedure

Follow the instructions below when manually releasing each individual axis brake.

1. Press the Emergency Stop button on the controller or the TP to turn OFF the motor power.
2. Check that the safety countermeasures are working.
   - No personnel near the robot
   - The safety fence is plugged in

3. If there is a possibility of physical injury and/or damage to equipment, take appropriate measures to support the robot arm, and the load of the tool at the end of the arm, before using the brake release switch.
   The robot arm can be supported using a crane and a wire. (Figure below)

WARNING

Failure to take these measures could lead to an accident and/or robot failure.

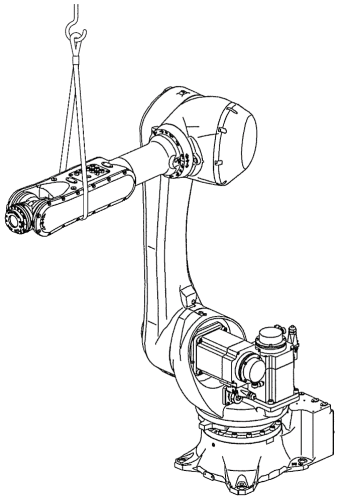

4. Connect the harness from the brake release switch box to the brake release switch connector.
   - Brake release switch connector position on F0x controller

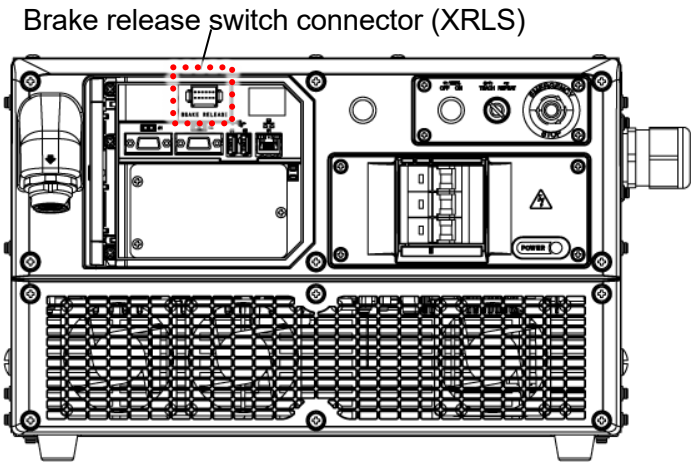

CAUTION

To ensure that the brake release switch can be connected immediately to the XRLS connector in the event of an emergency, do not place anything in front of the connector.

5. Check that the brake is not released with a single switch.
   If the brake is released, stop using it immediately.

   (1) Momentarily press the brake release switch for the target axis.

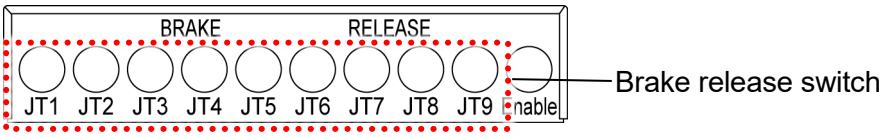

CAUTION

If the electromagnetic brake is released when a single switch is pressed, immediately stop using the brake release switch. The switch may be malfunctioning.

   (2) Press and hold down the Enable switch.

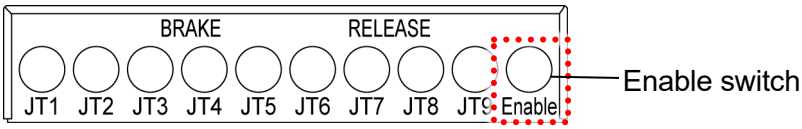

6. While holding down the Enable switch, press the brake release switch for the axis you wish to release.
   Note: The JT1 axis of CP180L/300L/500L/700L is controlled by two motors.
   To release the JT1 axis, press the switch labeled "JT1" and "JT1s" (or "JT1s/JT5/A").
   (For the JT1 axis of CP110L, pressing only the "JT1" switch is sufficient.)
   Note: When releasing the JT5 external axis of CP110L, press the switch labeled "JT1s" or "JT1s/JT5/A".

・Axis indication on the brake release switch for models other than the CP Series.

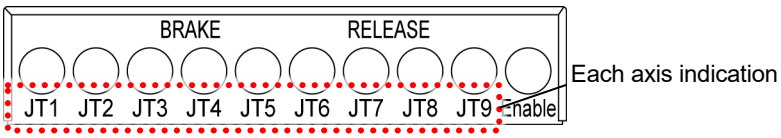

・Axis indication on the brake release switch for the CP series.
Note: Information displayed for the old product

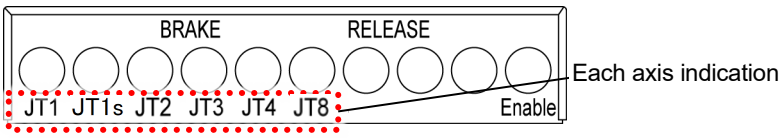

Note: Information displayed for the latest product

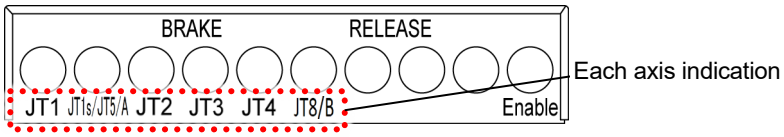

CAUTION

To ensure safety, release the brake for one axis at a time. Pressing two or more switches at the same time may result in an accident or robot malfunction.

7. The brake remains released until the brake release switch is no longer engaged.
   - Brake release axis of the robot

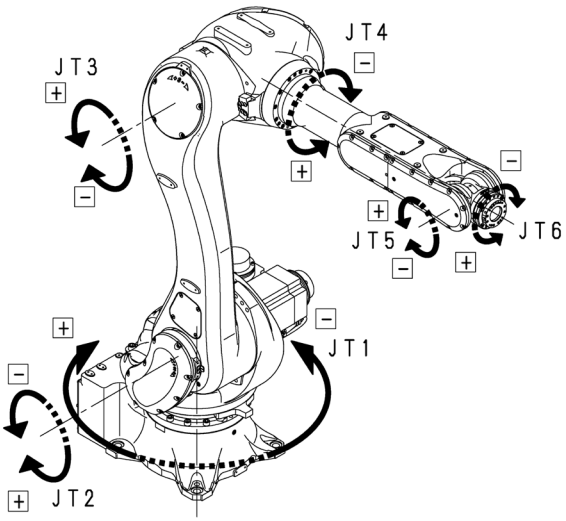

6-axis robot

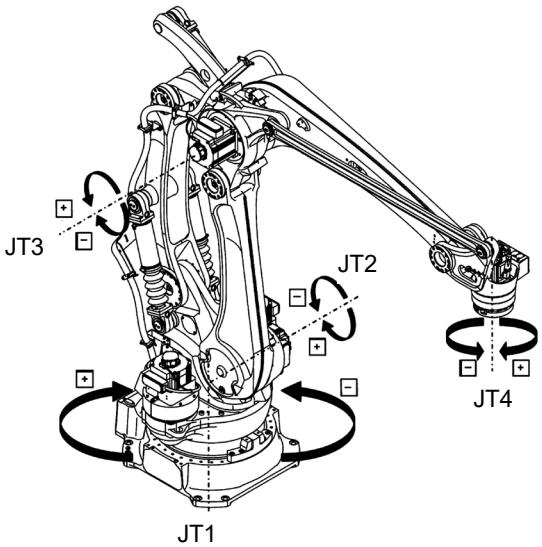

CP Series

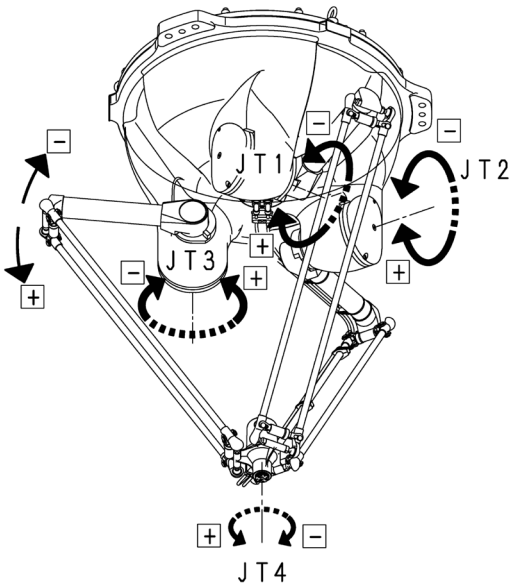

YF Series

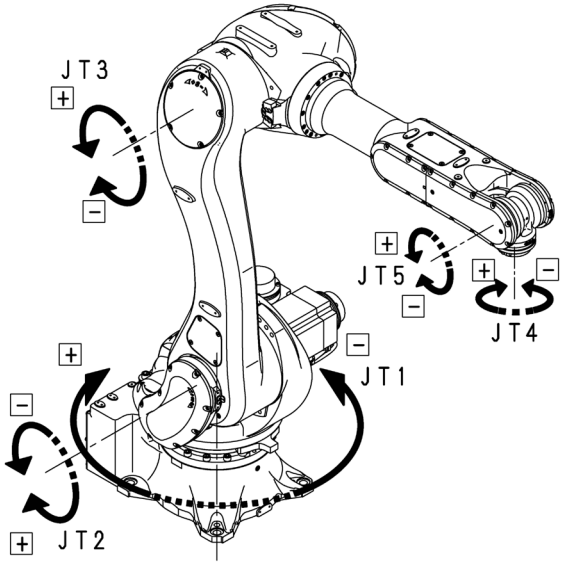

RD Series

CAUTION

There is a possibility that unintended loads may be applied to robot arm components and peripheral devices during brake release work. Before resuming operation, check the following:

1. **Check that there is no damage to the robot arm, protective parts, robot arm peripheral equipment, and cables.**
2. **In teach mode, turn the Enable switch ON and OFF, and check that the brake operates normally.**
3. **When operating the robot in teach mode, check that there is no looseness, abnormal noise, or abnormal vibration in the reducer or the released axis.**
4. **Refer to the manual of the connected robot arm, and check that the encoder zeroing has not shifted.**

If an abnormality is found, take corrective actions according to the "Troubleshooting Manual."

2 Workflow to be Followed When Installing and Connecting the Controller

The workflow described here is for the robot controller.
See the arm's "Installation and Connection Manual" for more information regarding the arm section of the robot.

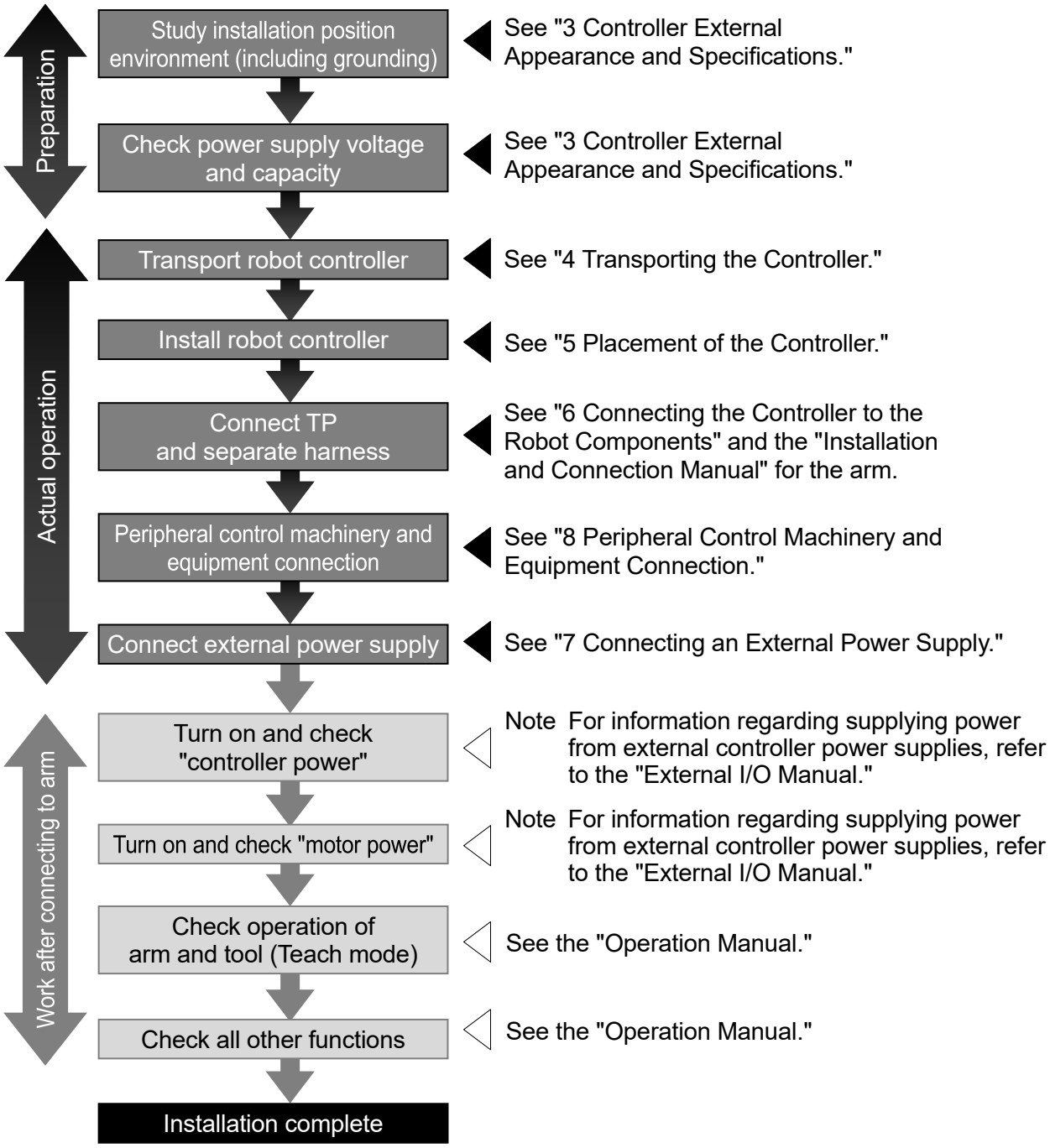

[NOTE]

This manual explains sections up to "Connecting an External Power Supply."

3 Controller External Appearance and Specifications

3.1 External Appearance of Controller

■F01 controller

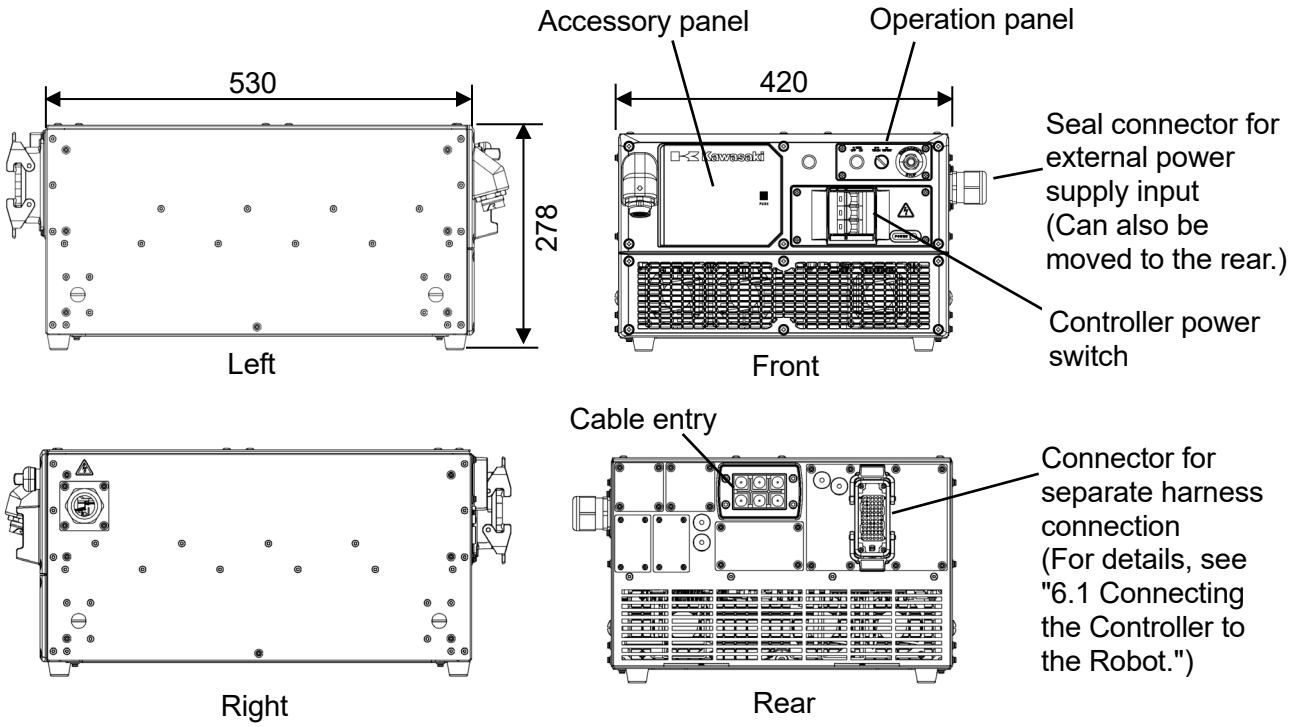

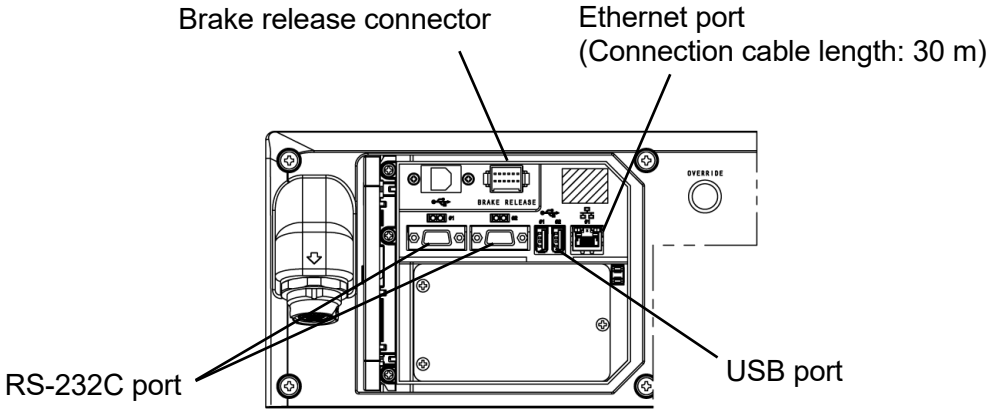

Internal accessory panel connection port

■F02 controller

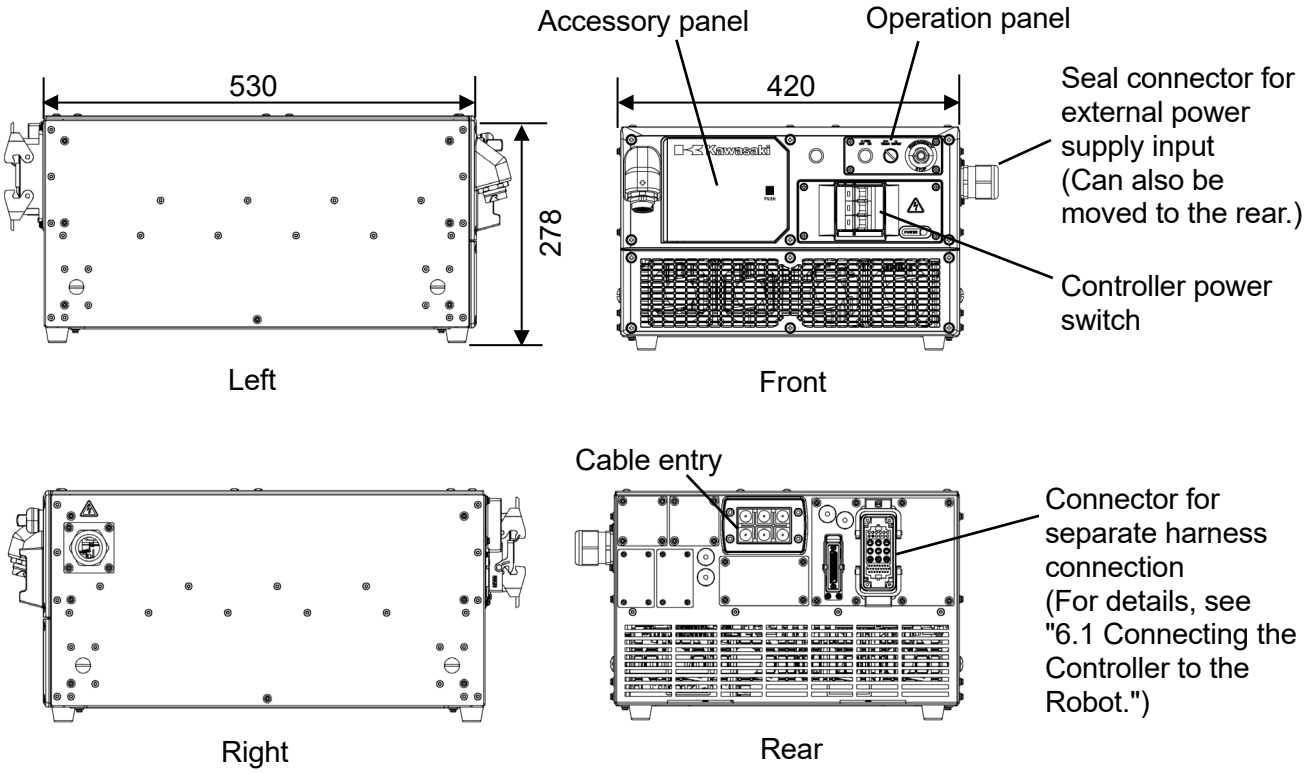

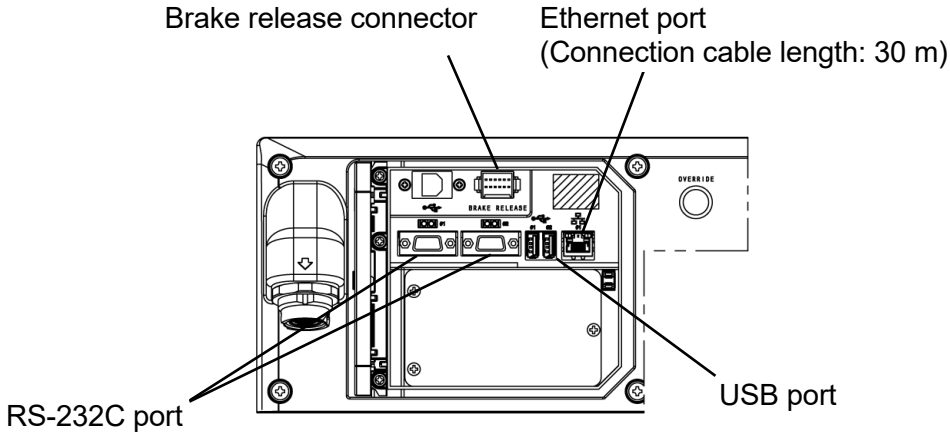

Internal accessory panel connection port

■F03/F04 controllers

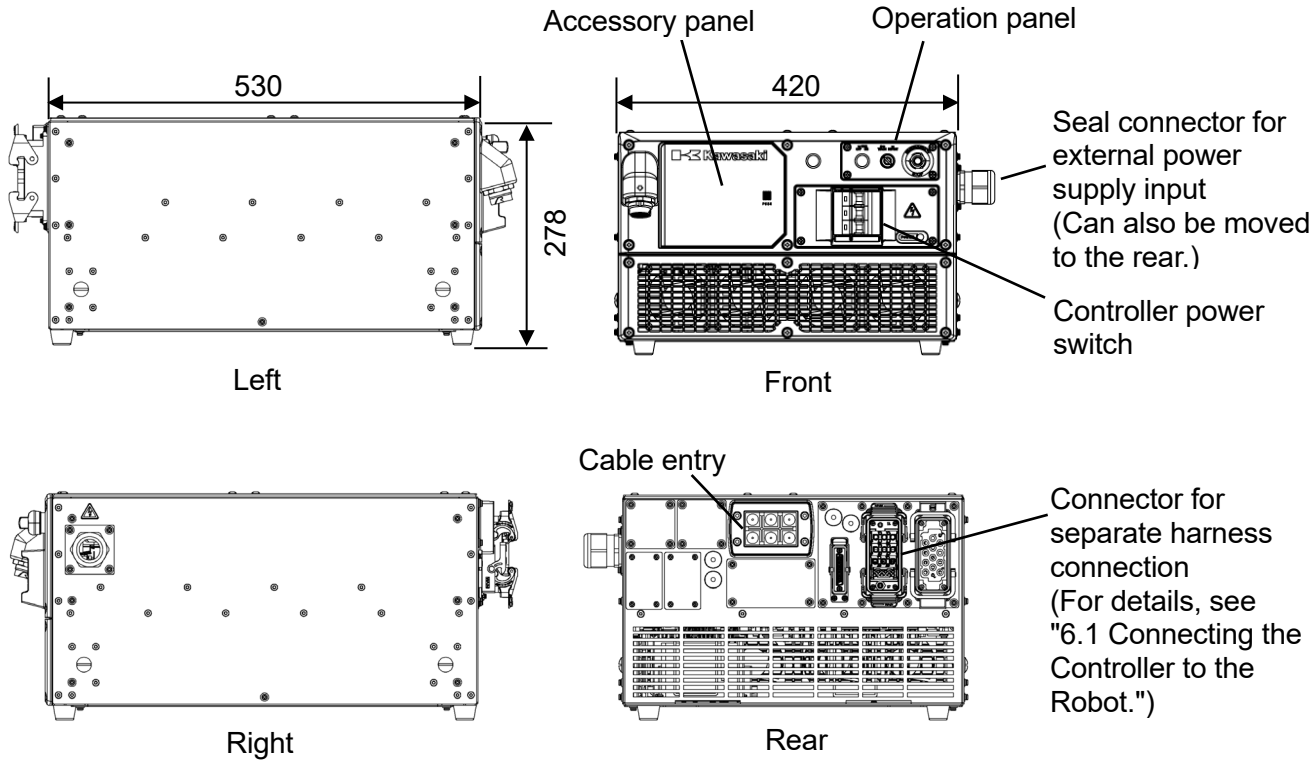

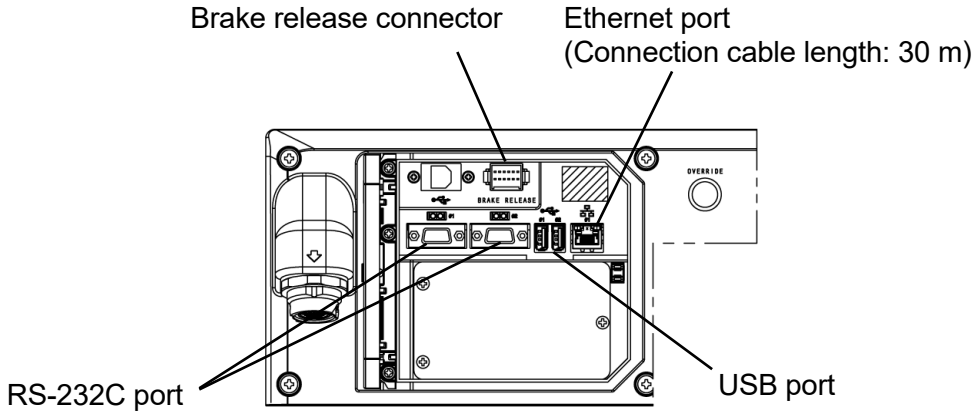

Internal accessory panel connection port

■Transformer unit

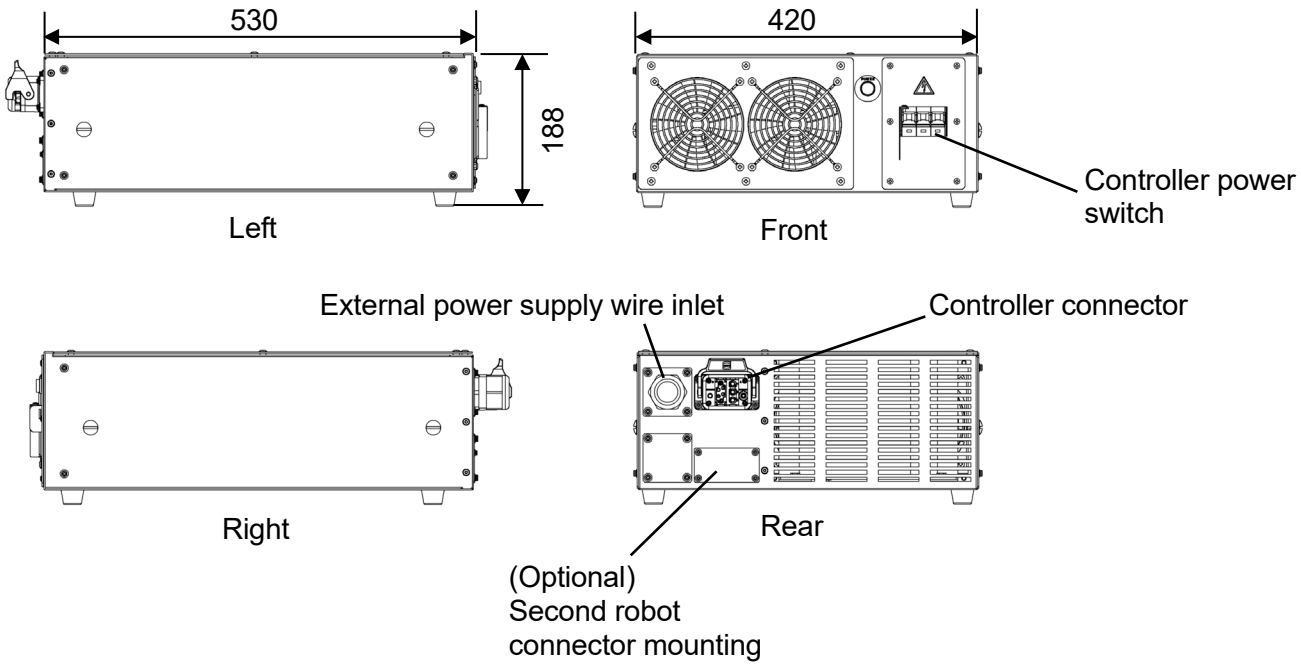

3.2 External Appearance of TP

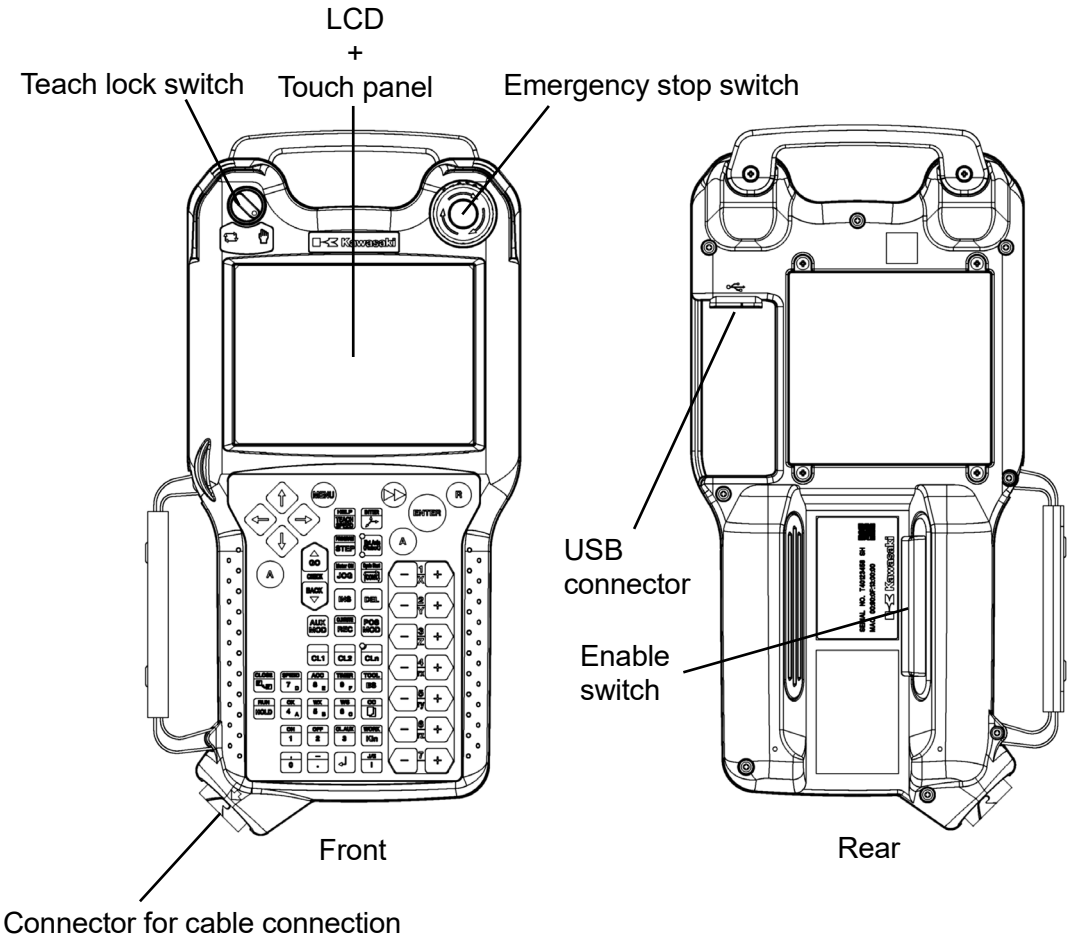

3.3 F0x Controller Specifications

■Controller

Structure		Sealed structure, indirect cooling system
Mass*1		F01: 20 kg F02/F04: 25 kg F03: 30 kg
Ambient environment	**Temperature**	0 to 45°C
	Humidity	35 to 85% RH (there must be no condensation)
	Elevation	0 to 1,000 m above sea level
	Pollution degree*3	3 or lower
Vibration conditions	**10 to 57 Hz**	Half amplitude 0.075 mm
	57 to 150 Hz	1 G
Power supply*2		AC200-220 V ±10%, 50/60 Hz, 3-phase AC200-230 V ±10%, 50/60 Hz, single phase (only some models)
Power supply capacity		See the following table "External power supply connection capacity and cable specification."
Grounding		Dedicated class D grounding or higher (100 Ω or less)
TP cable length		5 m/10 m/15 m/20 m/25 m/25 m/30 m/25 m/40 m/45 m

* 1 With no other options installed.
* 2 Single-phase operation is only possible when R Series 006 to 013N (RS and RA010L are not applicable), BA006/013N or YF002 is connected to the F01 controller.
However, an optional transformer unit (400 V, 3-phase) is required in order to comply with the CE/UKCA markings of standards.
* 3 The pollution degree is specified in IEC60664-1.

■Transformer unit

Structure		Sealed structure, indirect cooling system
Mass		42 kg
Ambient environment	**Temperature**	0 to 45°C
	Humidity	35 to 85% RH (there must be no condensation)
	Elevation	0 to 1,000 m above sea level
	Pollution degree	3 or lower
Power supply		AC380-415 V ±10%, 50/60 Hz, three phases, or AC440-480 V ±5%, 50/60 Hz, three phases (Switched by voltage control tap connector) Note To use AC440 V -5% or less, set the voltage control tap to 400 V.
Power supply capacity		See the following table "External power supply connection capacity and cable specification."
Grounding		Dedicated class D grounding or higher (100 Ω or less)

Length of cable connected to the controller	1 m (optional maximum 5 m)

■ **External power supply connection capacity and cable specification**

Destination	Connection arm model	Power supply capacity	Recommended power cable size (including ground wire)	Power cable length
F01 controller	R Series 006 to 020 (excluding 015X) BA Series 006 to 013N Y Series BU Series 015N	Maximum 5.6 kVA	3.5 mm^2 or more (AWG #12 or higher)	200 m or less
F02 controller	R Series 025 to 080, 015X BA Series 013L Z Series MT Series B Series BXP Series MXP Series 360L BU Series 015X	Maximum 7.5 kVA	5.5 mm^2 or more (AWG #10 or higher)	200 m or less
F03 controller	RD Series CP Series	Maximum 12 kVA	5.5 mm^2 or more (AWG #10 or higher)	200 m or less
F04 controller	MX Series MXP Series	Maximum 12 kVA	5.5 mm^2 or more (AWG #10 or higher)	200 m or less
Transformer unit		Maximum 12 kVA	5.5 mm^2 or more (AWG #10 or higher)	200 m or less

■ **Specification of external power supply connection circuit breaker inside controller**

Destination	Rated current	Rated voltage	Rated breaking capacity
F01/F02 controllers	30 A	AC277 V	10 kA (UL489)
F03/F04 controllers	40 A	AC240 V	10 kA (UL489)
Transformer unit	25 A	AC480 Y/277 V	10 kA (UL489)

4 Transporting the Controller

When transporting the controller, follow the procedure below.

4.1 Lifting with Wire

F0x Series controllers cannot be lifted with wire by themselves. If transporting a controller by itself, see "4.2 Transportation by Two People." Lifting the transformer unit by itself with wire is possible, or optional connector brackets can be used to suspend both the controller and transformer unit.
When lifting with wire, mount the following eyebolts into the M10 tapped holes shown in the figure below. (Manufacturer: TAKIGEN, Model: B-130-10 or equivalent product) Ensure that the thread length of the eyebolts does not exceed 25 mm.

WARNING

1. **Under no circumstances should people be used to support a suspended controller, nor should they walk underneath or approach a controller while it is suspended.**
2. **Hook the wire to the eyebolts in the manner shown below.**
3. **Check that the eyebolts are not loose and if loose tighten them. Failure to tighten them may cause the controller to fall and break.**

CAUTION

1. **Use wires, cranes, and other equipment which is able to withstand loads of 200 kg or greater when the full complement of optional products are installed on the controller.**
2. **Remove teach pendants when lifting with wire.**
3. **Be sure to use a wire length of 1 m or greater as shown in the following figure.**
4. **Be aware that the controller may tilt when lifted.**
5. **Make sure that the cables do not get caught on other equipment, etc.**

Transformer unit

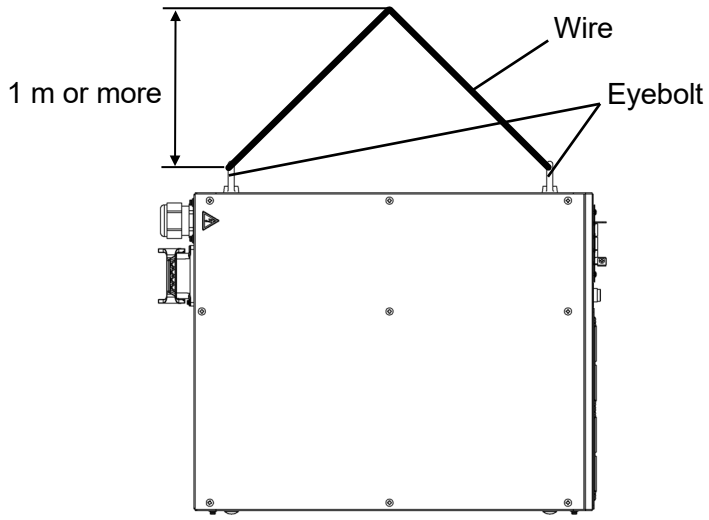

Top of transformer unit

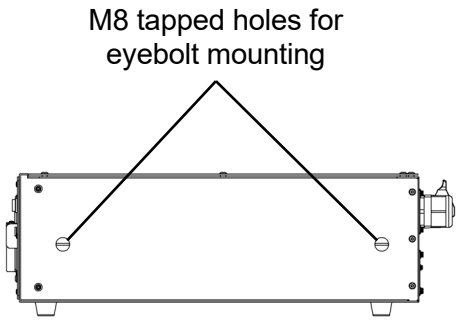

Right side of transformer unit

Controller + transformer unit when connected

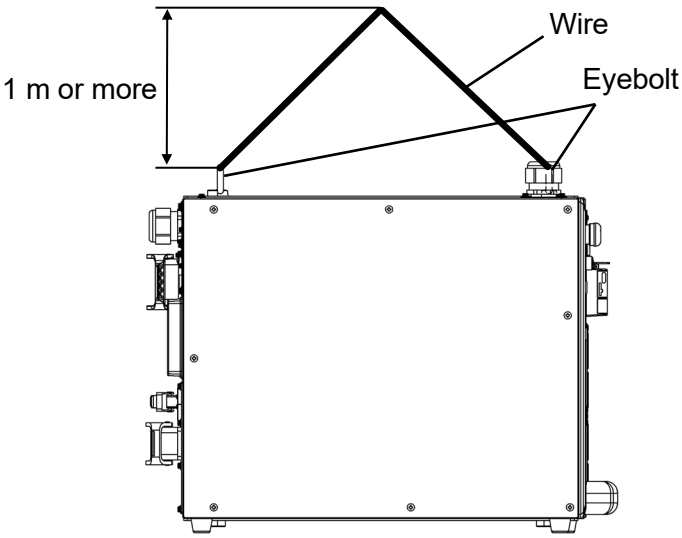

Top of controller + transformer unit

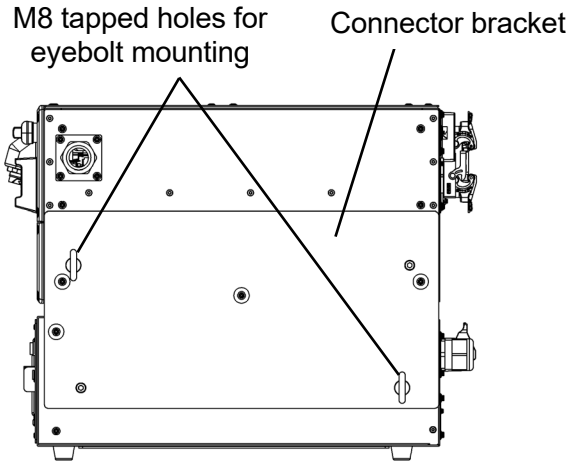

Right side of controller + transformer unit

4.2 Transportation by Two People

CAUTION

1. **Remove the teach pendant.**
2. **During transport, be careful not to subject the unit to shock or impact.**
3. **Since the gap between the base surface and the floor is narrow (18 mm), it is important to lift one side at a time. After lifting your side a little, place your fingers securely underneath to get a proper grip and then raise the unit.**
4. **Because the controller is heavy (F01: 20 kg, F02/F04: 25 kg, F03: 30 kg, transformer unit: 42 kg), do not attempt to hold it using only your fingertips.**

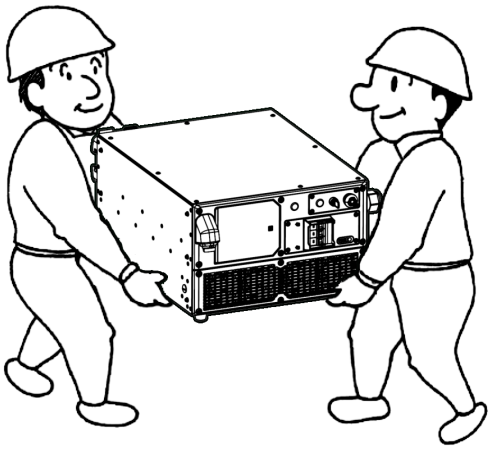

5 Placement of the Controller

5.1 Horizontal Placement of the Controller

The F0x controller is placed horizontally as standard.
When setting the controller in place, be sure to follow the instructions below in order to keep its internal temperature at a suitable level.

■ Precautions

- Three-tiered stacking of controllers is possible when placed horizontally.
- Objects placed on top of the controller will need to be removed when maintenance is to be carried out.

■ Placement location

- The controller should be placed on a flat stand high enough to ensure that the controller power switch/operations switch is 0.6 to 1.9 m above the floor.
- The rear of the controller should be at least 200 mm clear of the nearest wall.

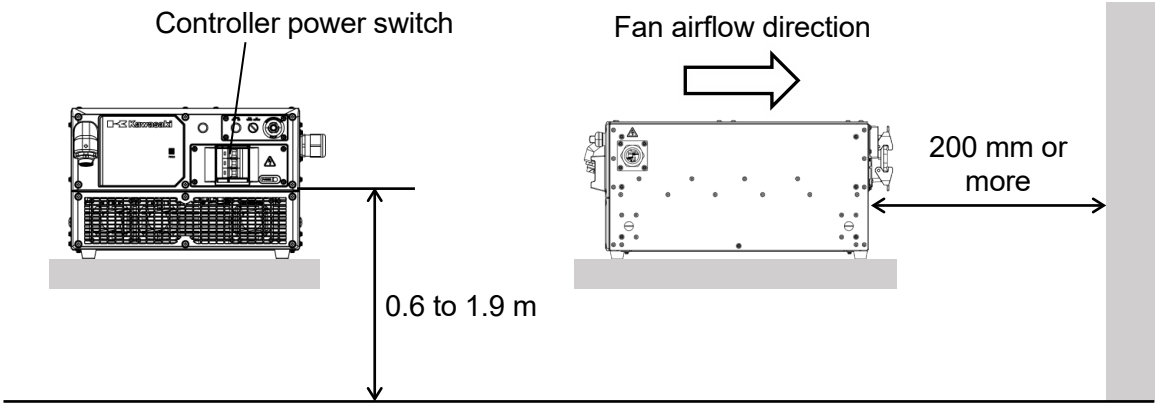

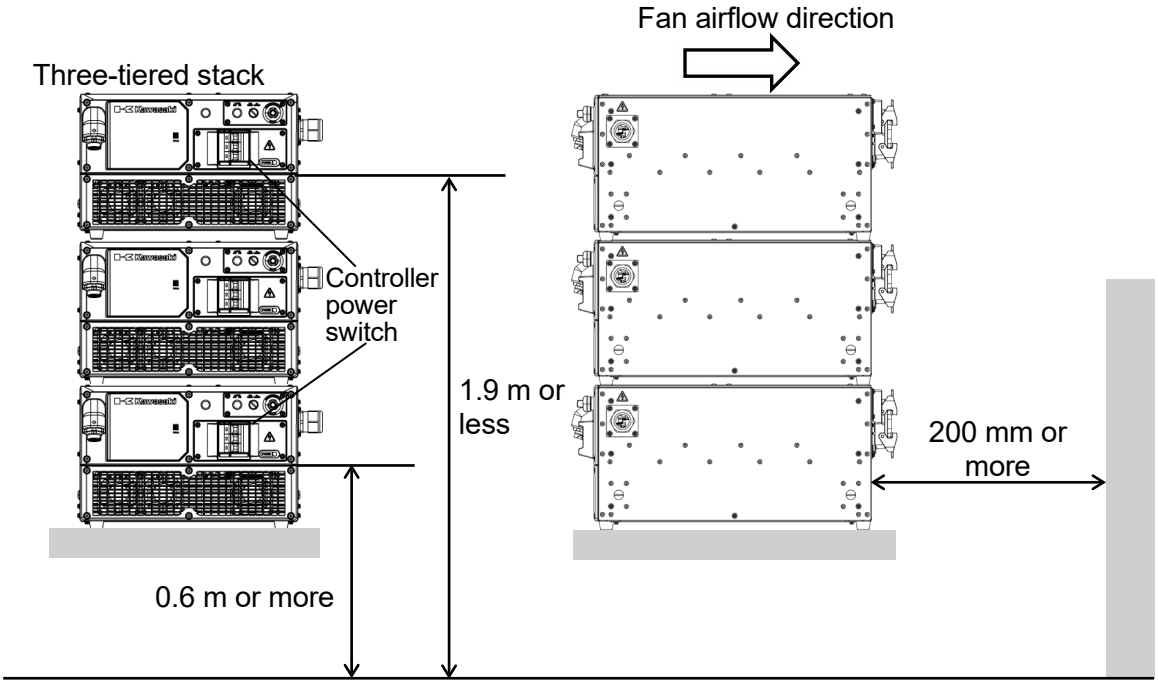

Also, two-tiered stacking with a transformer unit is possible when placed horizontally.

■Precautions

- Transformer units cannot be stacked on one another.
- Up to two controllers can be stacked on top of a transformer unit.
- The placement requirements are the same as those for controllers.

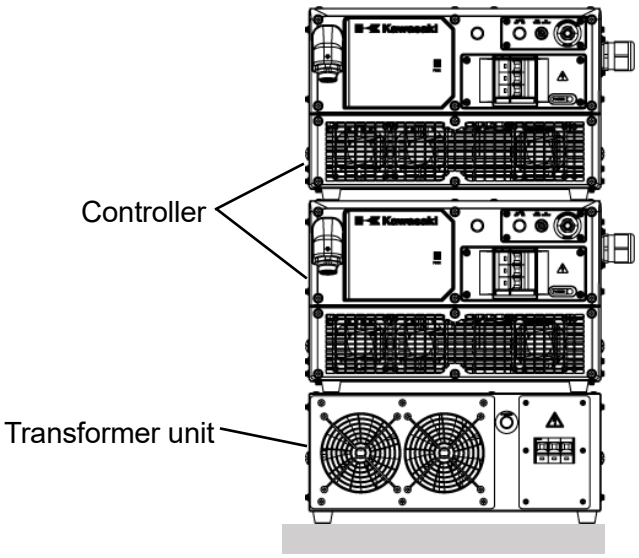

Controllers and transformer units can be connected using an optional connector bracket (part number: 50833-0455) as shown in the figure below.

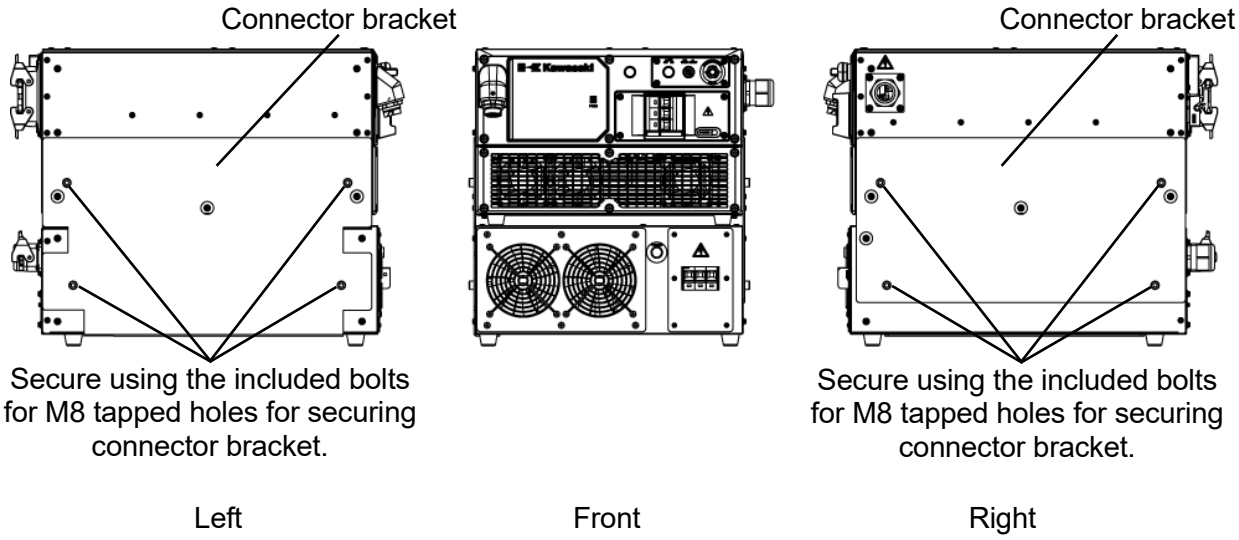

5.2 Vertical Placement of the Controller

When placing the controller vertically, be sure to follow the instructions below.

■ Precautions

- If the controller is placed vertically, objects may not be placed on top of it.
- Mount the rubber feet to the bottom.
- Create the fixing bracket shown in "5.3 Tap Positions on the Side of the Controller" and secure the controller so that it does not fall over.

■ Placement location

- The controller should be placed on a flat stand high enough to ensure that the controller power switch/operations switch is 0.6 to 1.9 m above the floor.
- Place the unit with the controller power switch facing up.
- The rear of the controller should be at least 200 mm clear of the nearest wall.

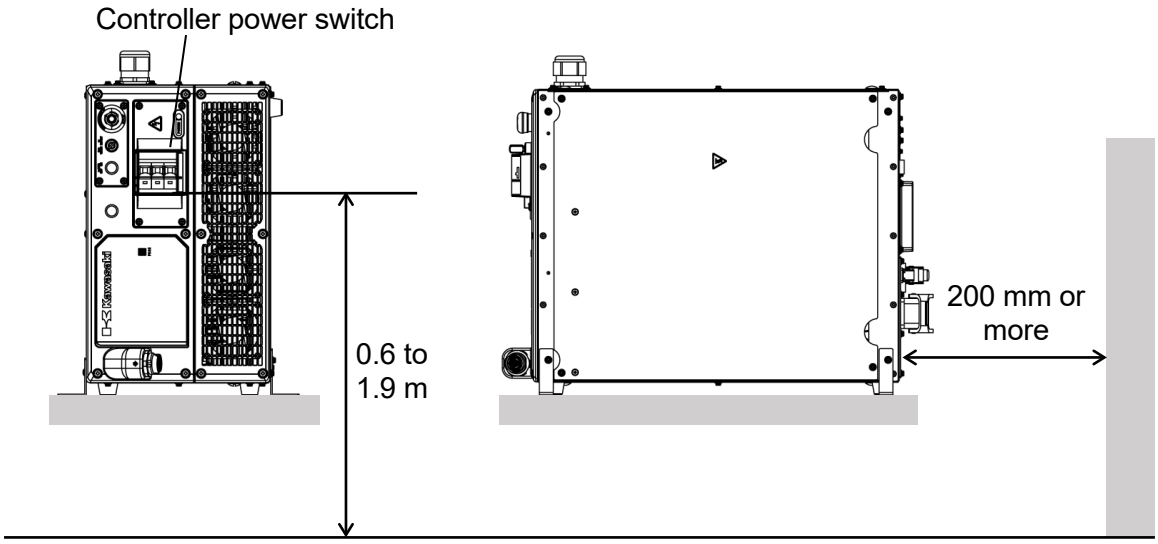

When placing the transformer unit vertically, be sure to follow the instructions below.

■Precautions

- If the controller is placed vertically, objects may not be placed on top of it.
- Mount the rubber feet to the bottom.
- The placement requirements are the same as those for controllers.

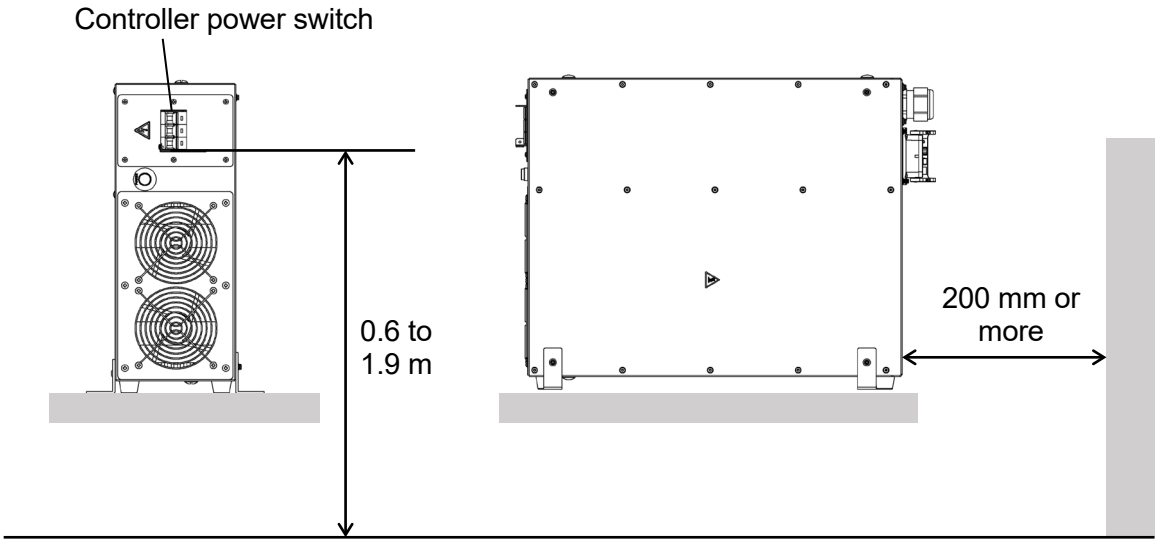

5.3 Tap Positions on the Side of the Controller

If the tapped holes below are to be used, take care that the bolts do not interfere with internal parts.
Refer to the figure below for the length of the bolts to be used.

■F0x controller

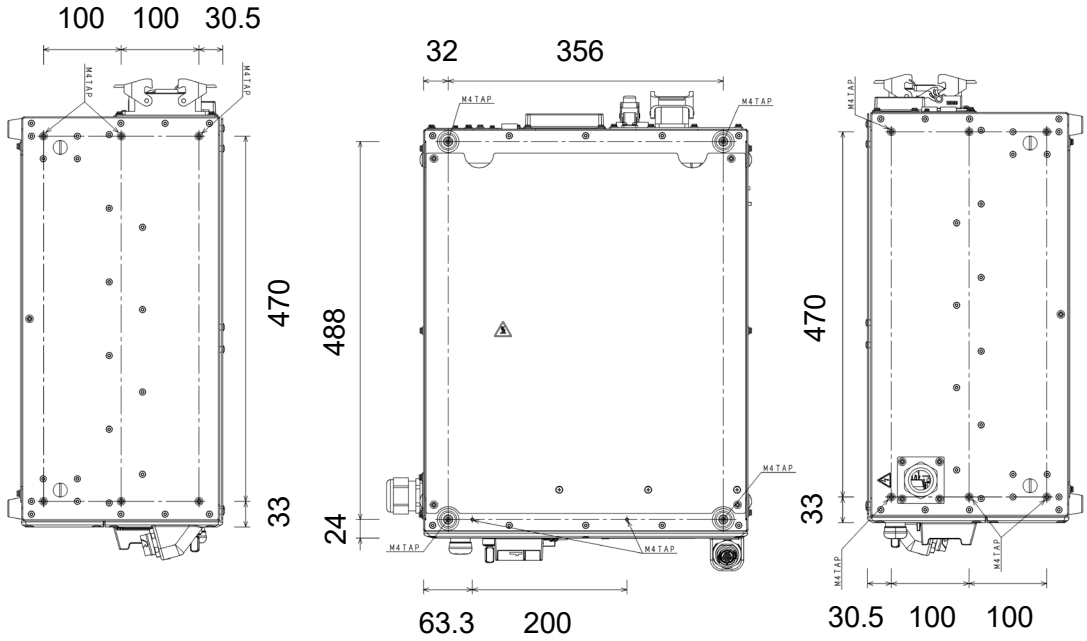

■Transformer unit

If the tapped holes below are to be used, take care that the bolts do not interfere with internal parts.
The length of the bolts used is the same as those used for the controller.

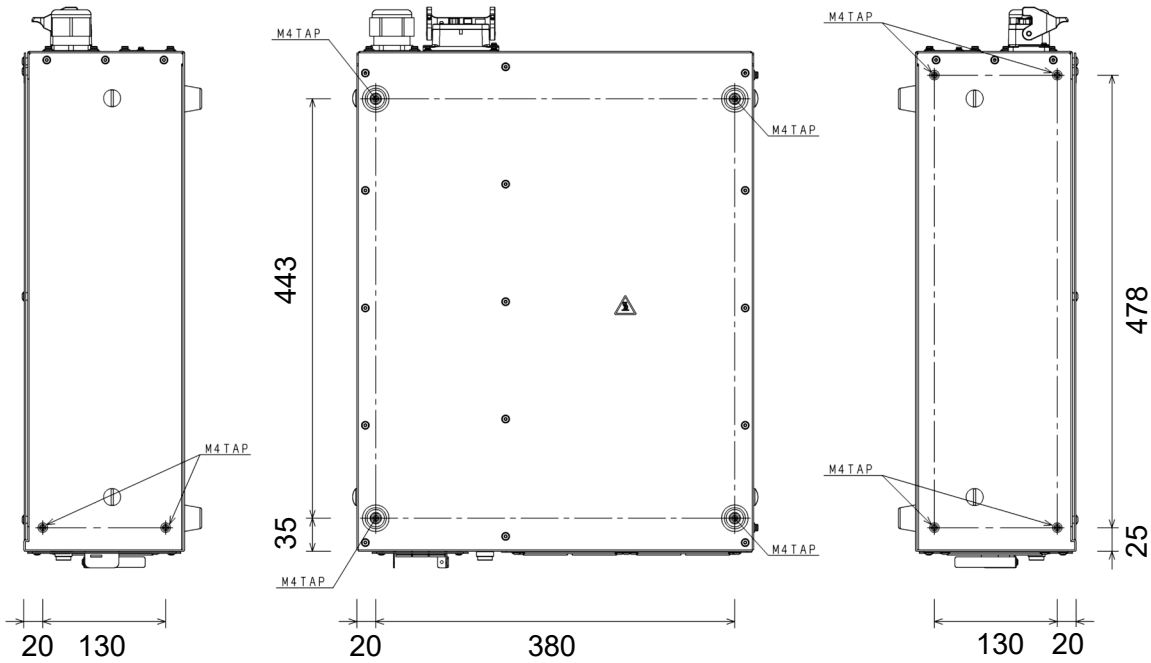

Example: When securing the controller to a metal sheet with a thickness of 2 mm, the bolt length should be 15 mm or less.

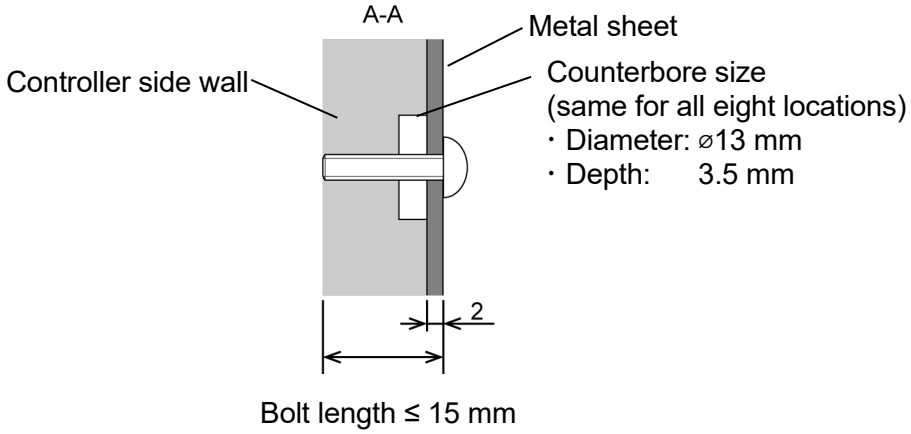

Example: How to secure the controller

[NOTE]

When using the controller in a vertical position, the position at which the metal plate for mounting the controller is secured must be indicated by being marked or labeled.
Use a metal plate and fixing screws with sufficient strength.

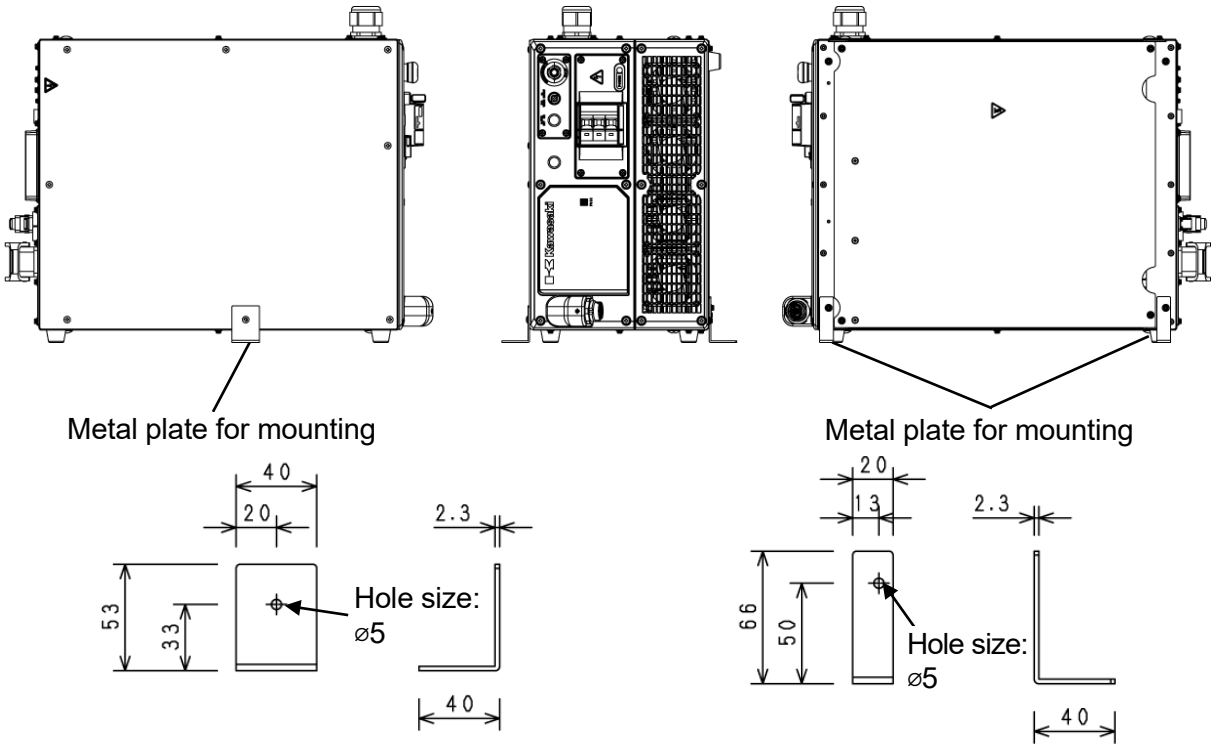

Example of metal plate for mounting

Example: How to secure the transformer unit

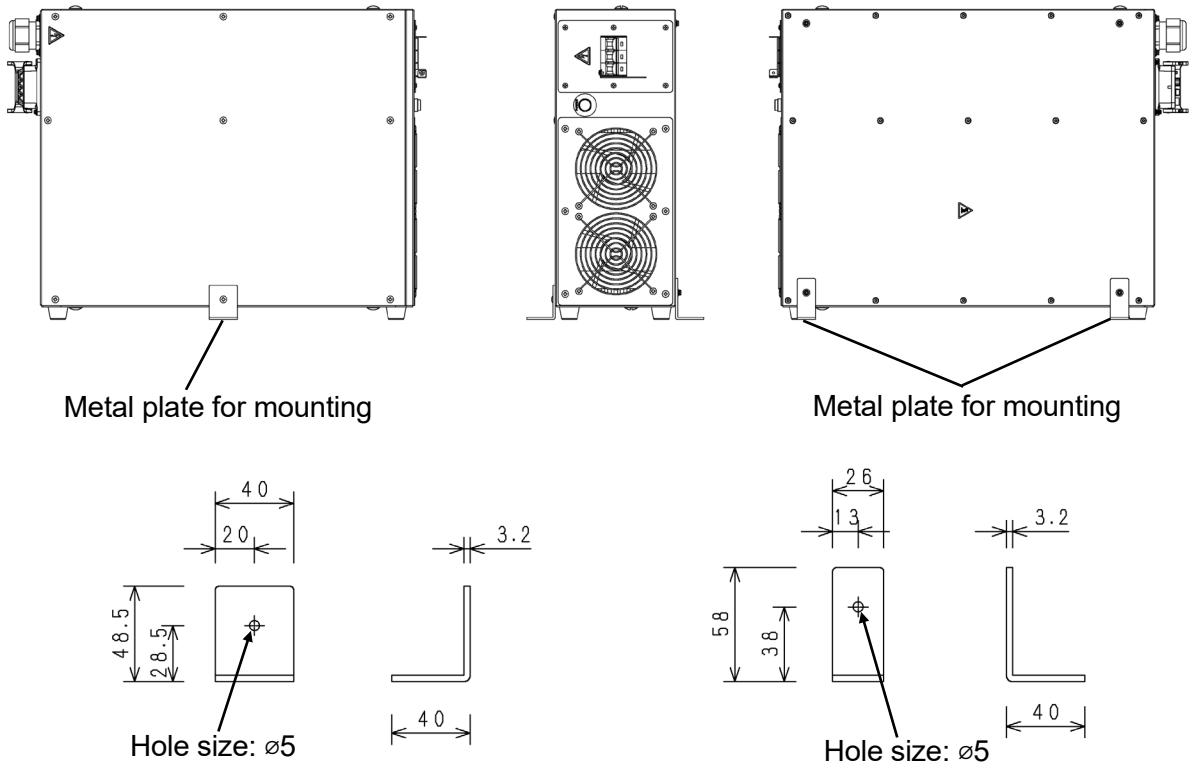

Example of metal plate for mounting

6 Connecting the Controller to the Robot Components

6.1 Connecting the Controller to the Robot

When connecting the controller to the robot, strictly observe the following cautions.

WARNING

To prevent electric shocks, do not connect the external power supply until the connection between the robot and the controller is complete.

CAUTION

1. **When connecting a harness, make sure the connector is connected at the correct point. Forcing a connection may lead to connector damage or electrical system failure.**
2. **Do not place anything on top of the harness or place it in a position where it could be walked on or driven over (with a forklift etc.). Stepping on or running over the harness could damage it or cause electrical system failure.**
3. **Keep the harness separate from the robot wiring and from high voltage power lines.**
   - **(1) Do not wire the harness close to or in parallel with other power lines.**
   - **(2) Do not bundle the wires.**
   - **(3) Keep the wiring at least 1 m clear of high voltage or current power lines.**
     Failure to do so may lead to malfunctions caused by noise from the power cables.
4. **Even if the harness is long, be sure to avoid winding, bending, or bundling the cables/wires. Bundling prevents generated heat from escaping, causing the harness to overheat. This could damage the cables and cause a fire.**
5. **Wire the communication cables and sensor cables separately from the robot motor harness.**
   - **(1) Do not wire them close to or in parallel with other cables.**
   - **(2) Do not bundle the wires.**
6. **Use twisted pair shielded cables for the communication and sensor cables, and connect the outer sheath of the shielded wire appropriately. If the connection is not done appropriately, PWM noise could affect the cable adversely, leading to communication errors.**
7. **Be sure to keep the secondary cable for the welding machine separate from the robot signal harness, and do not house them inside the same duct.**
8. **To ensure that PWM noise generated by the motor harness (power cable) does not adversely affect the control signal cable, strictly observe the cautions below.**
   - **(1) Keep the power cable and signal cables separate.**
   - **(2) Keep the power cable as short as possible.**
   - **(3) Do not parallel-wire or bundle the signal cables.**
   - **(4) When using wiring ducts, keep the power cables and control cables separate.**
   - **(5) Be sure to properly ground the controller.**

■Connection locations

Connect the separate harnesses in the positions indicated in the figure below.

CAUTION

1. **Be sure to secure each connector properly.**
   If connectors come unplugged, malfunctions might occur.
2. **Connect a separate harness when stacking controllers so that the exhaust port on the rear surface of the lowest controller does not become blocked.**

- Controller side

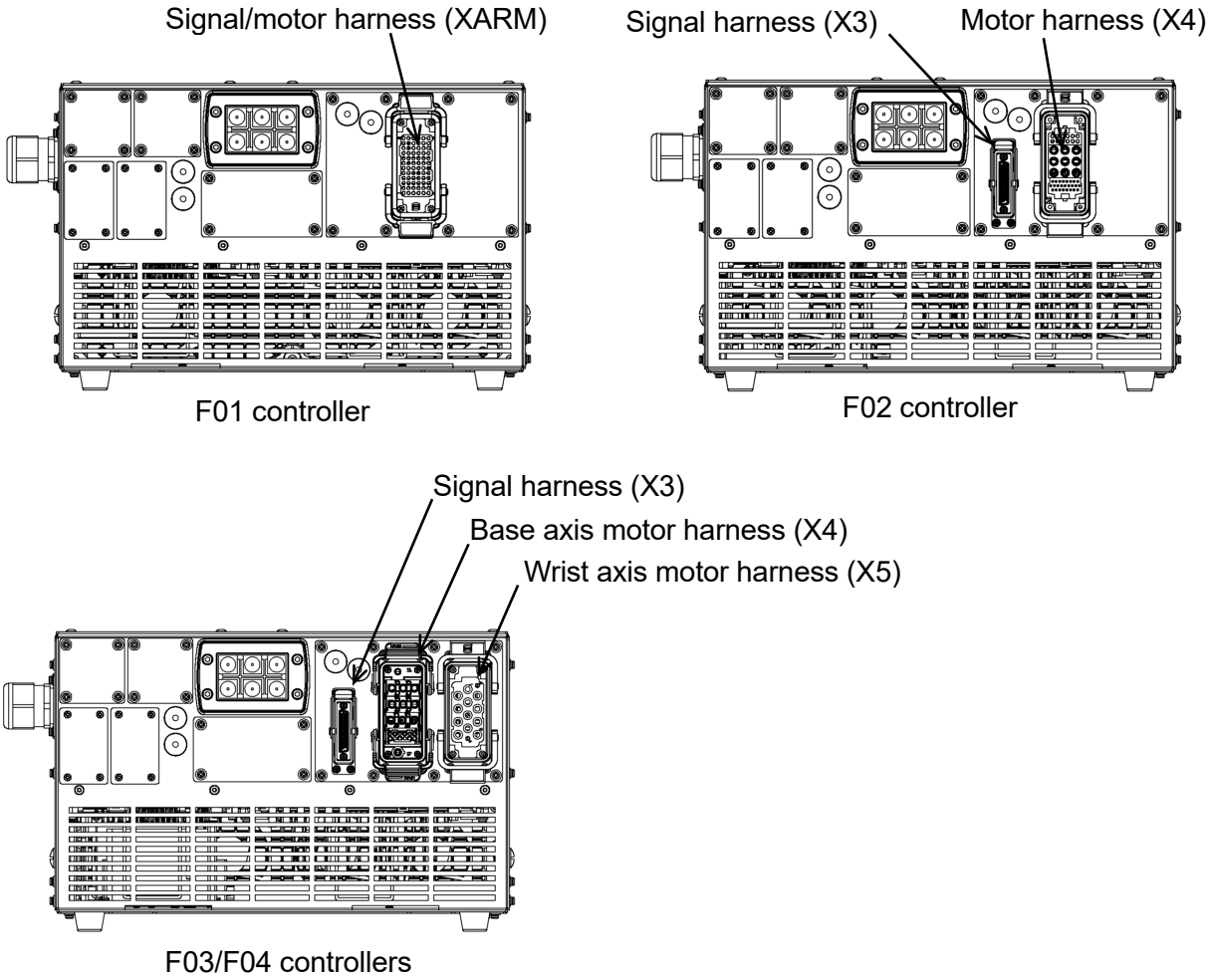

- Arm side

YF003N

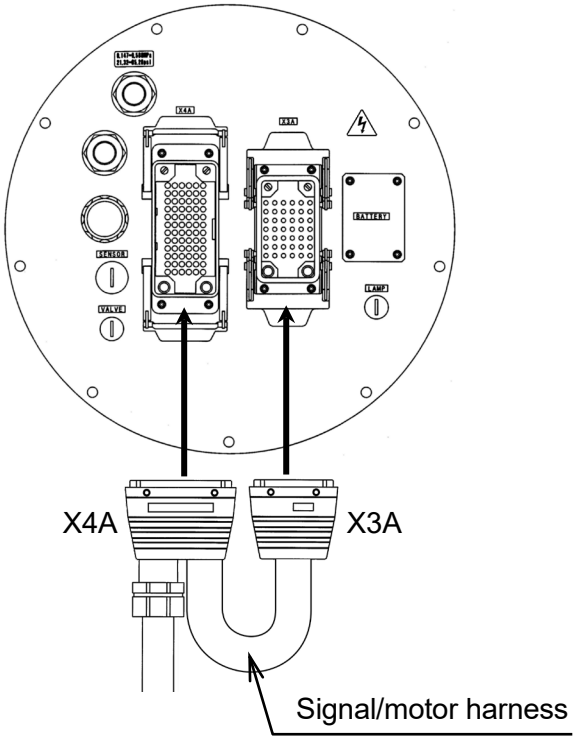

YF002N

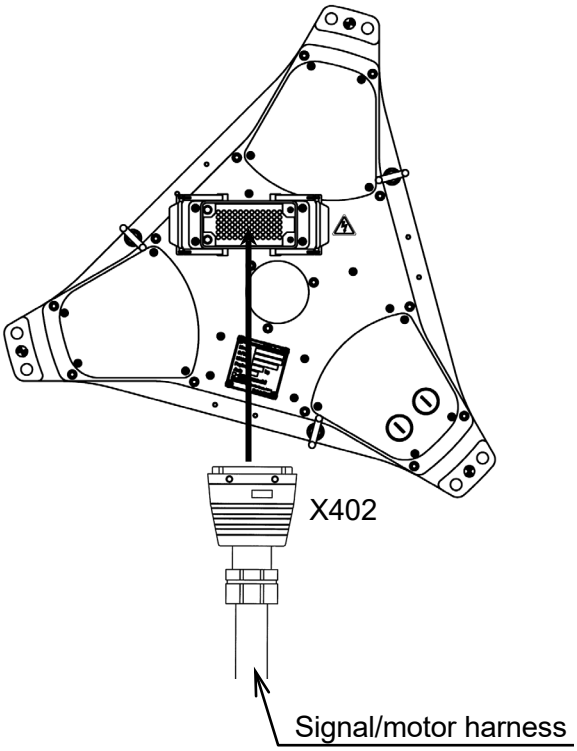

R Series 007N/007L

RS007N-A/RS007L-A

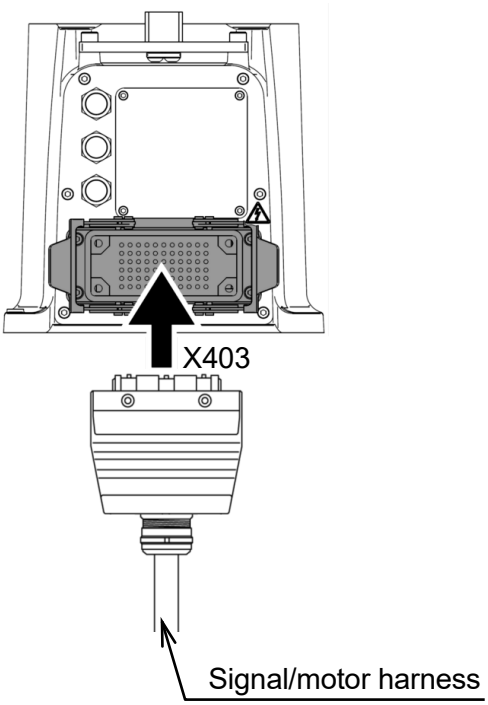

RS007N-B/RS007L-B

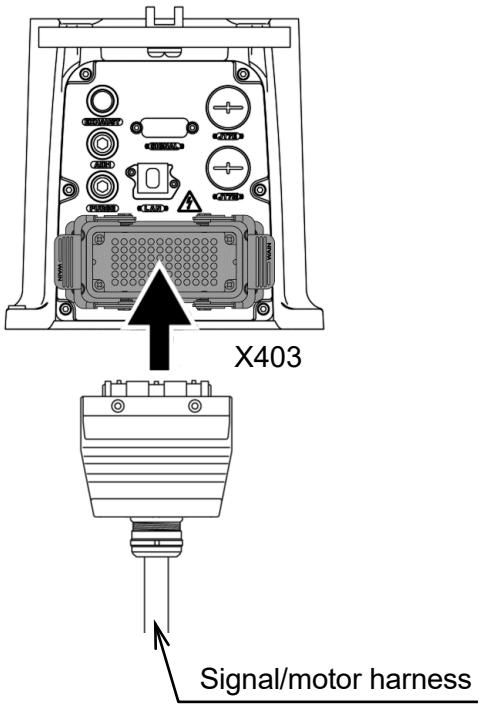

R Series 010N/006L

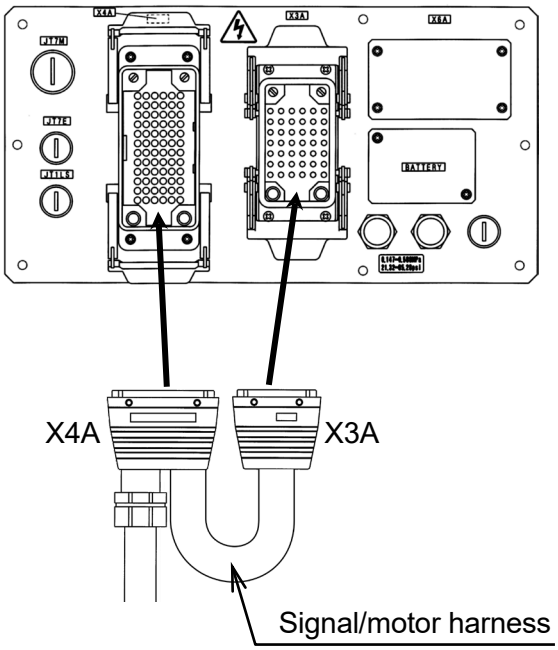

R Series 013N

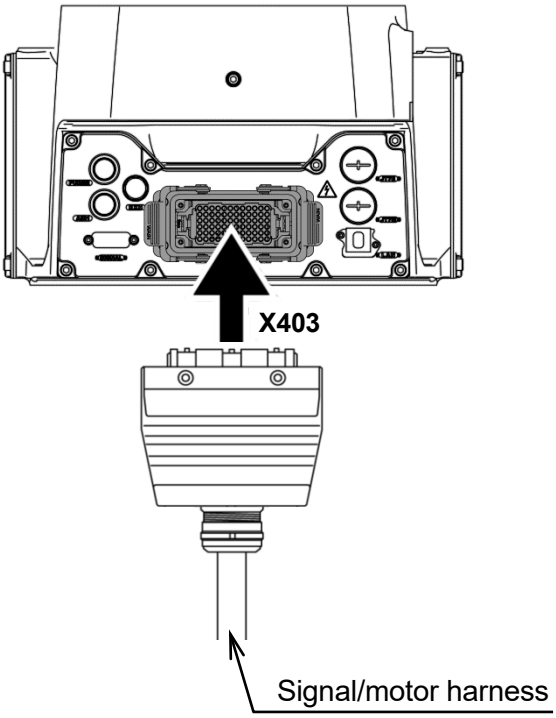

R Series 020N/010L

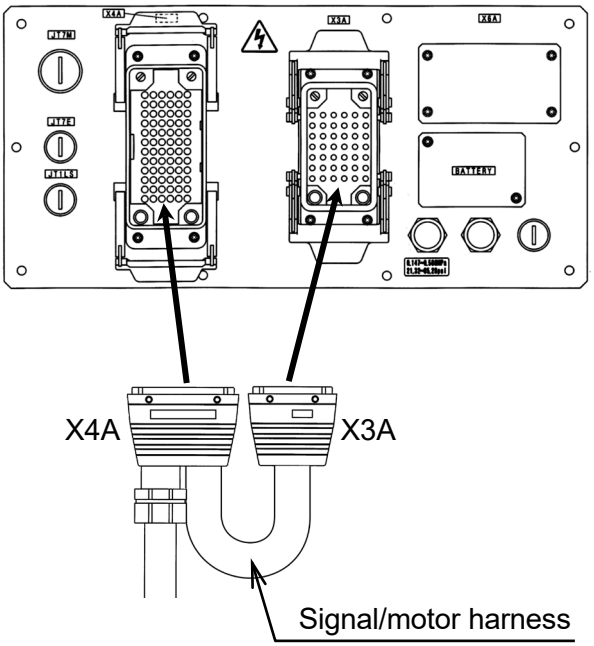

R Series 025S/025N

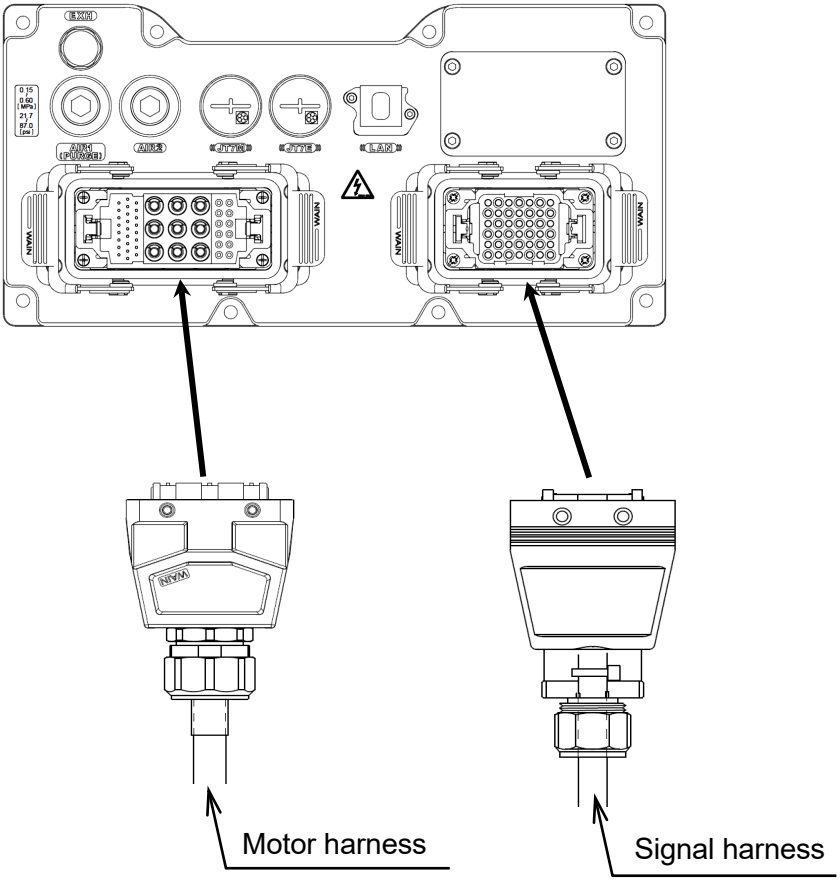

R Series 030N/050N/080N/015X

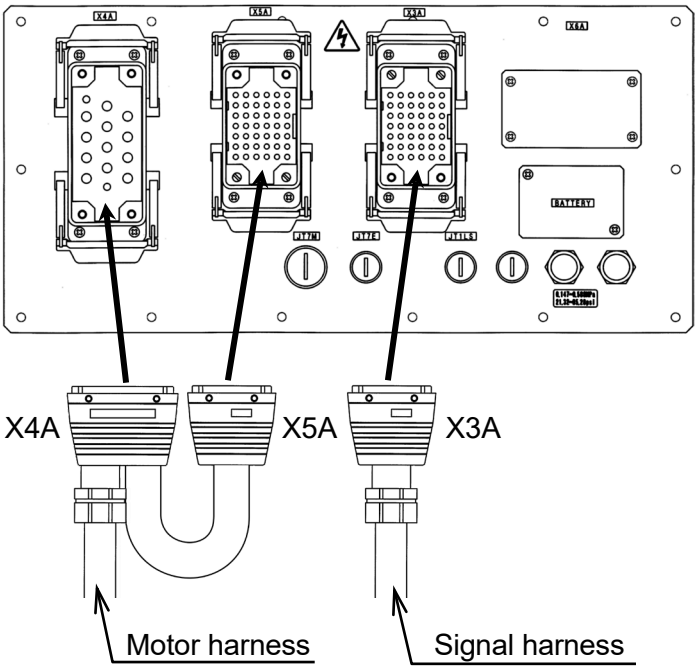

RD Series 080N

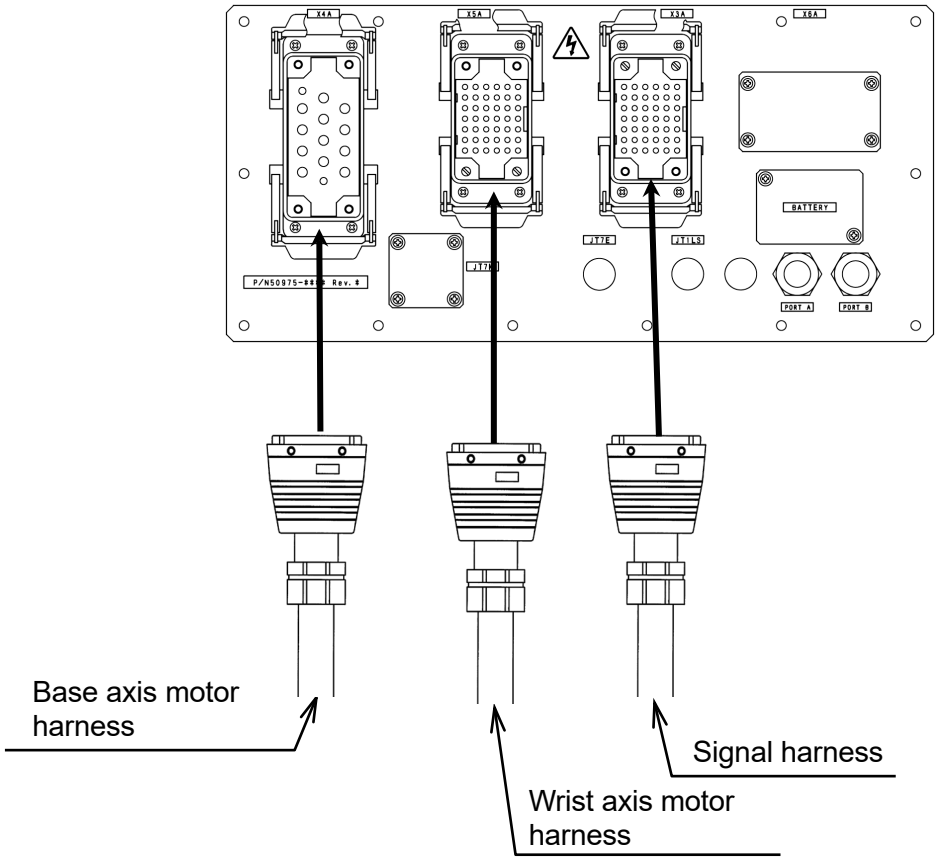

ZH Series

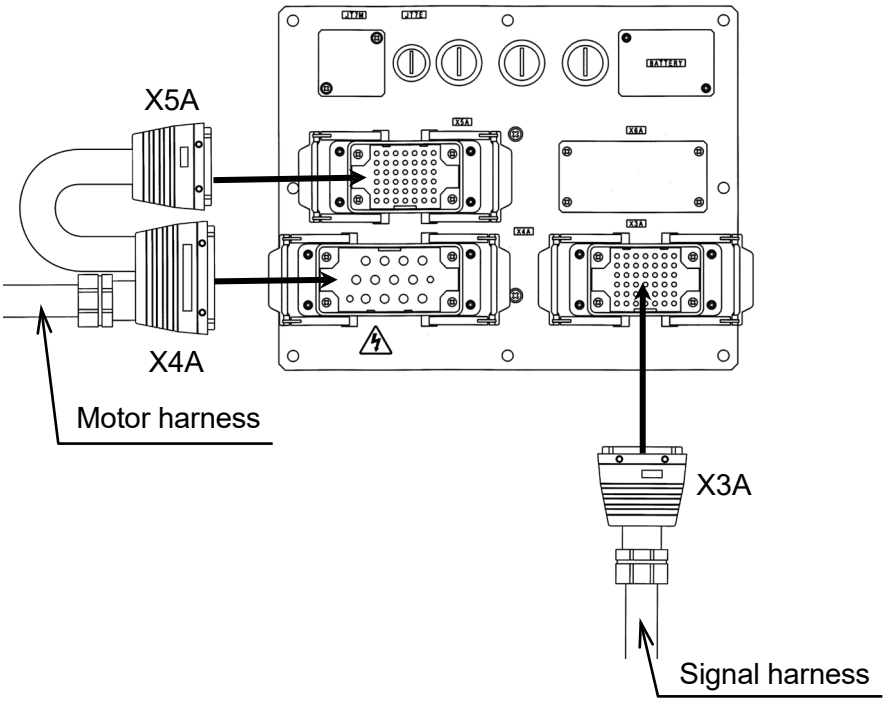

B Series

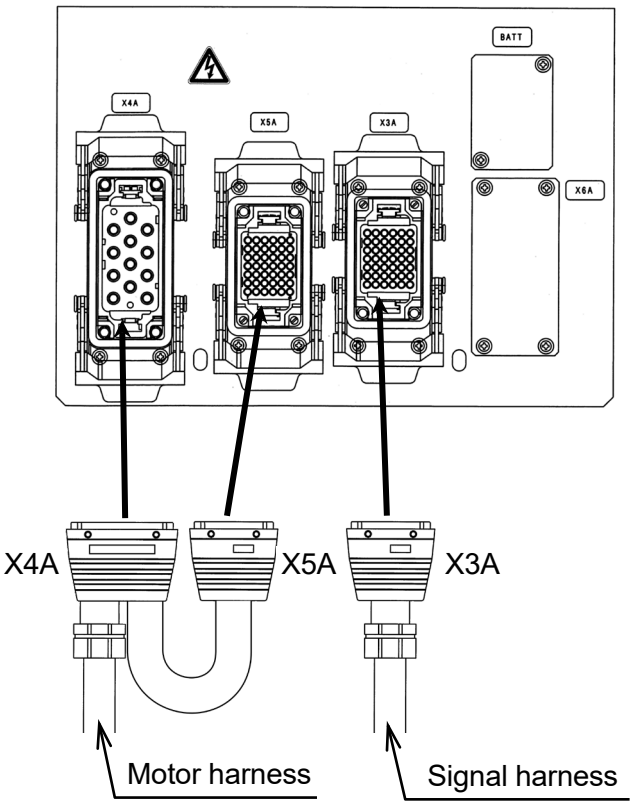

ZX/ZT Series

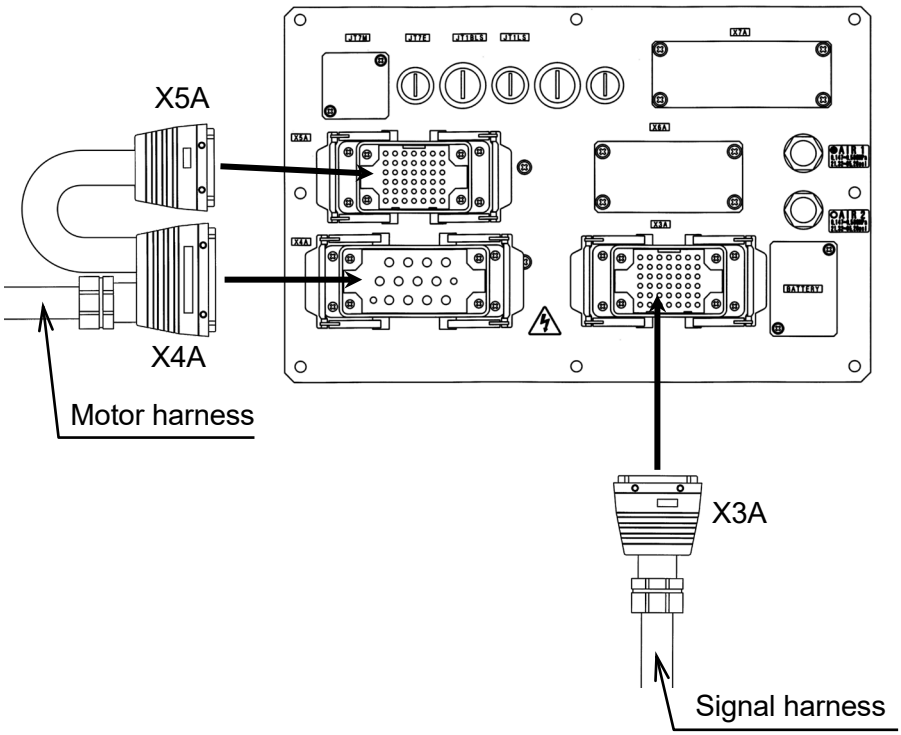

MT Series

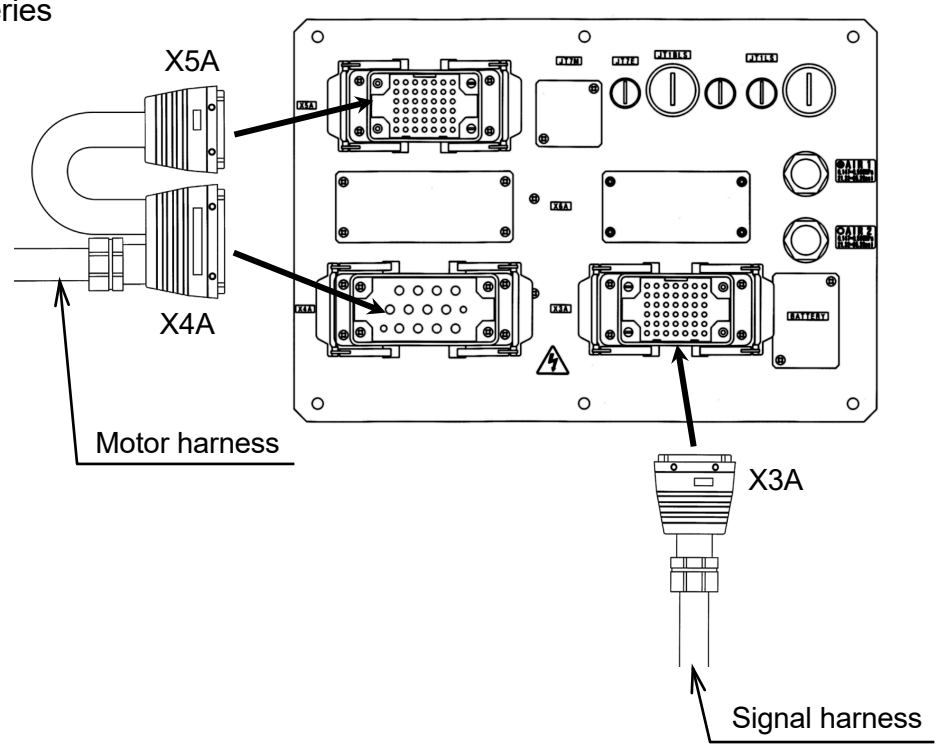

MX Series

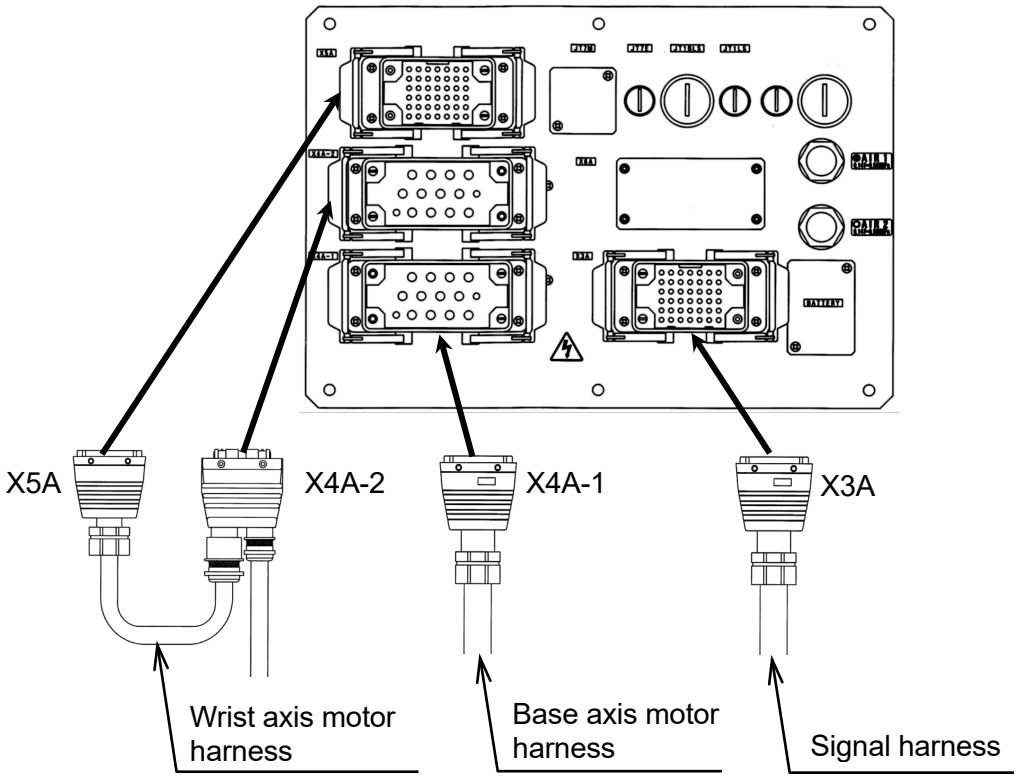

MXP360L

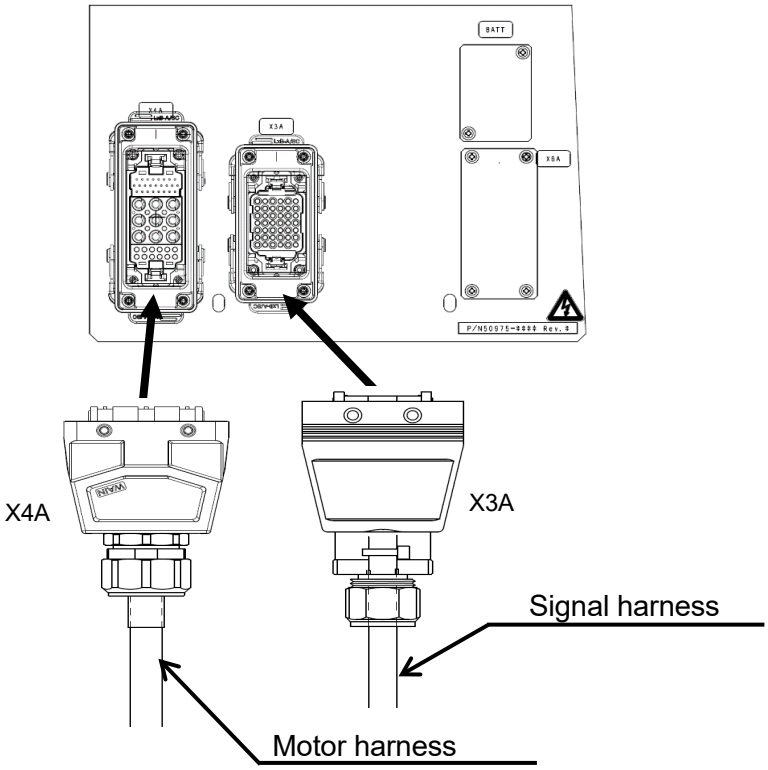

MXP Series (excluding MXP360L)

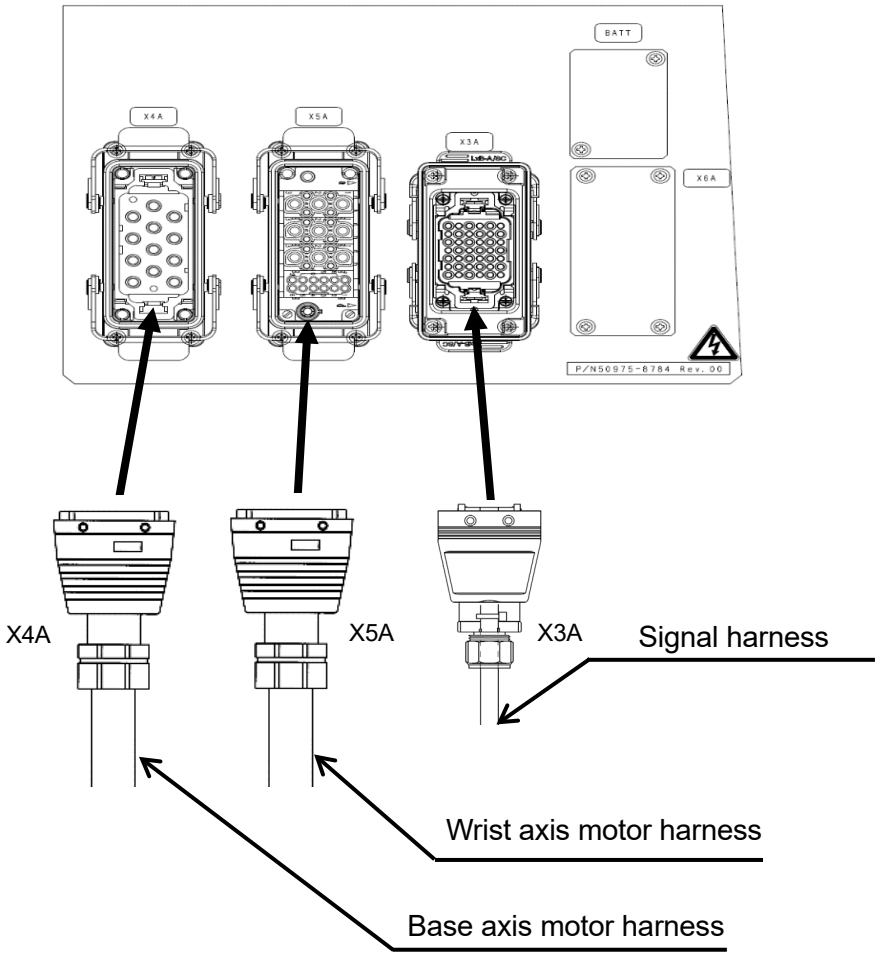

BA Series 006N/006L

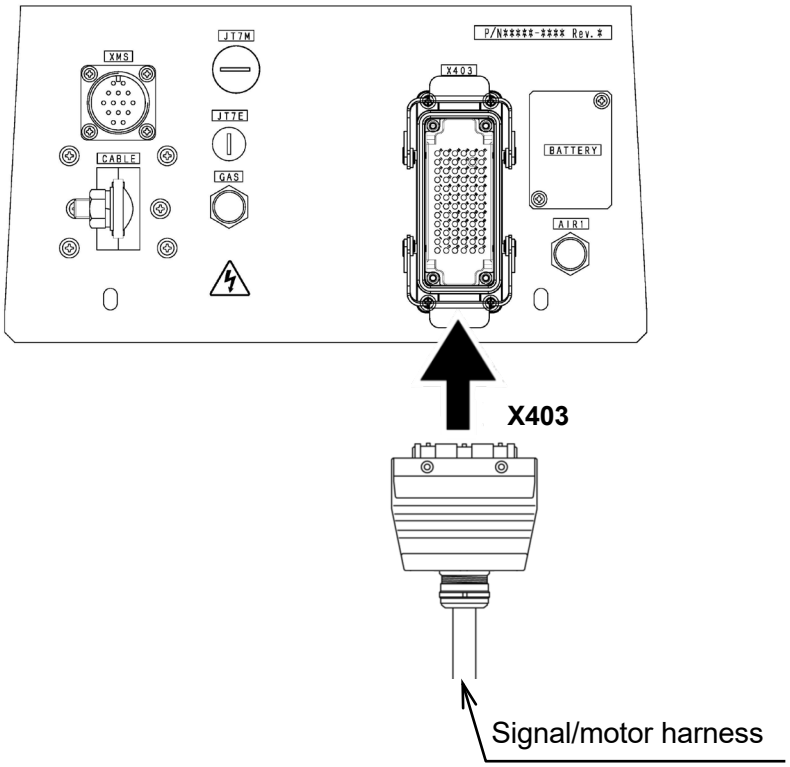

BA Series 013N

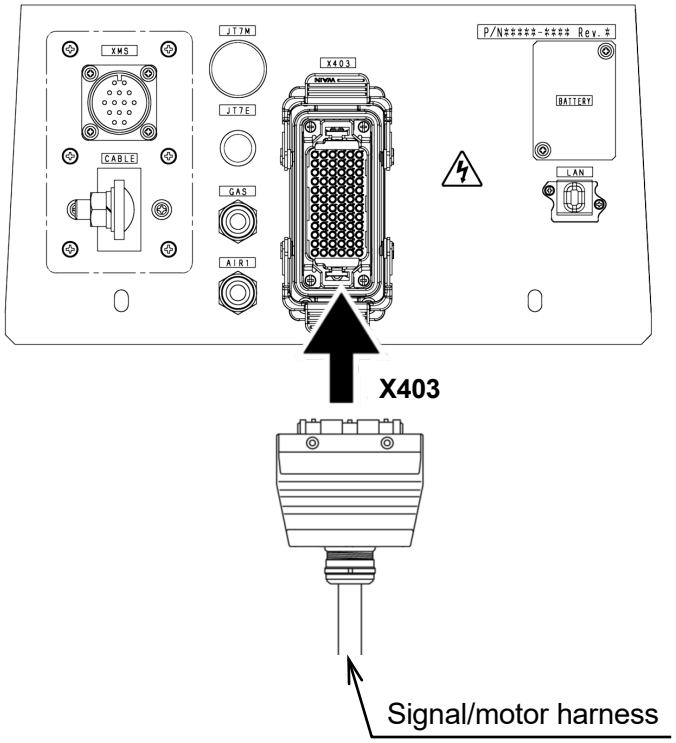

BA Series 013L

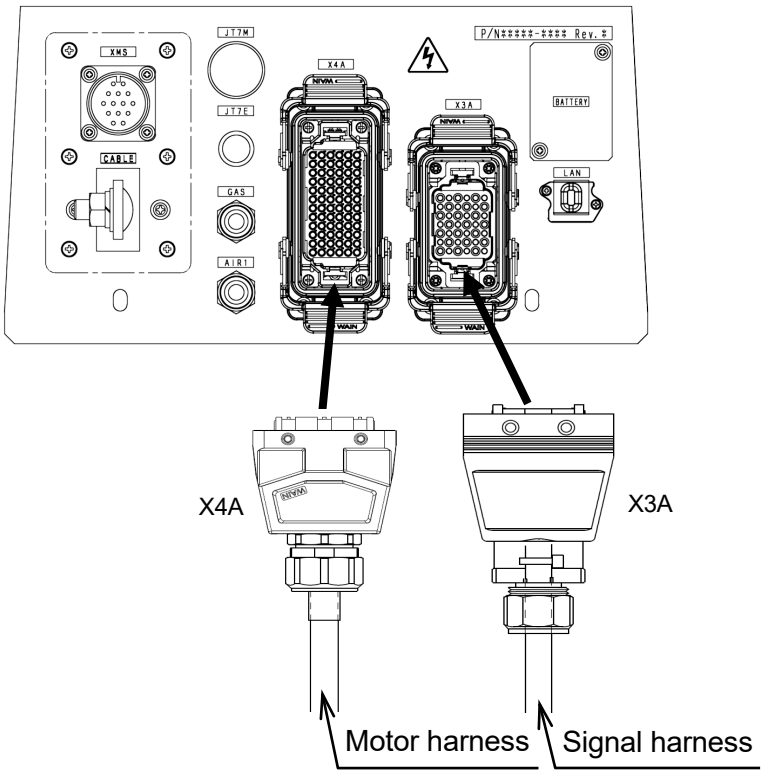

CP Series (CP110L)

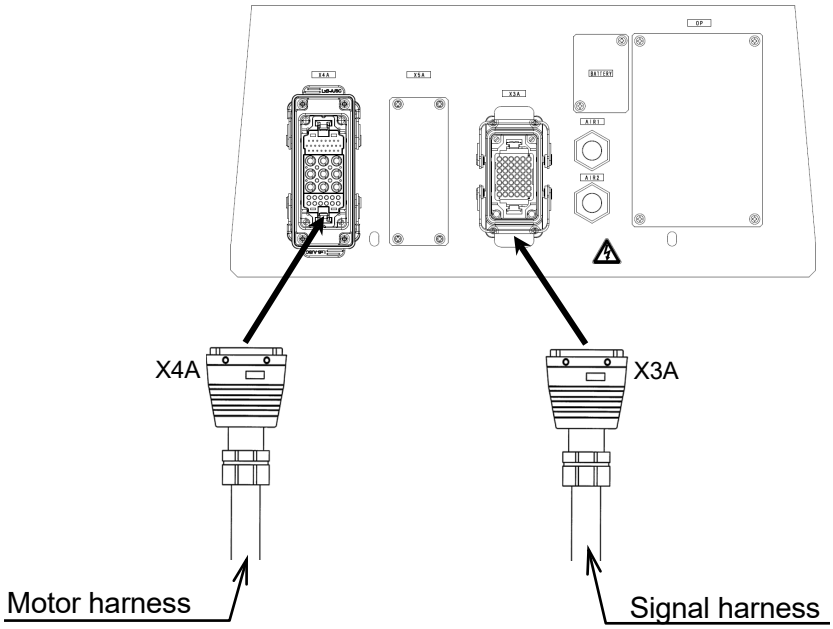

CP Series (excluding CP110L)

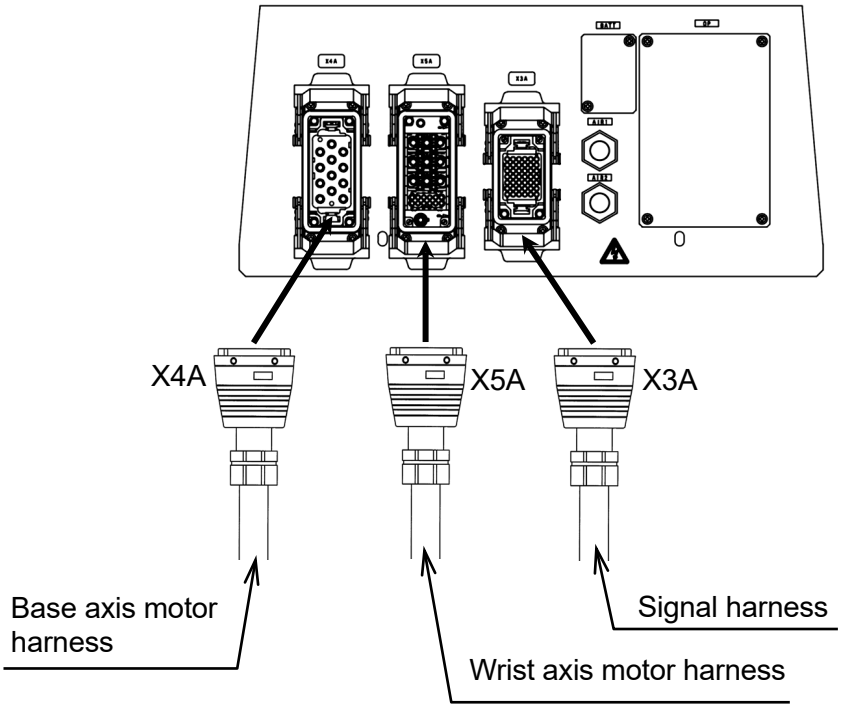

BXP Series

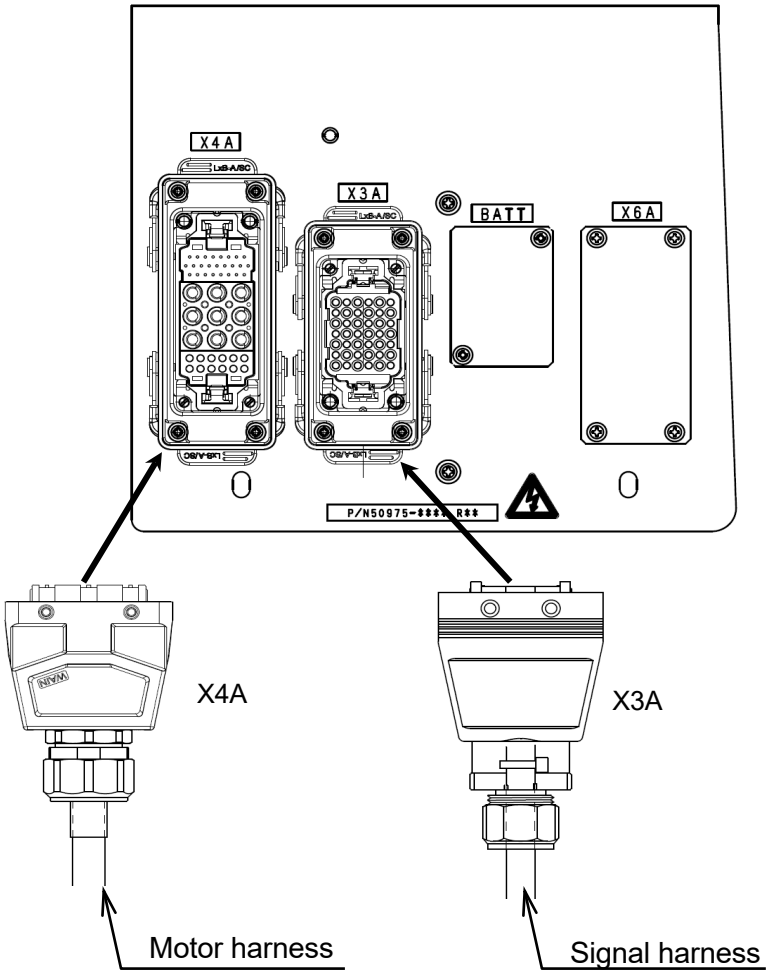

BU015N

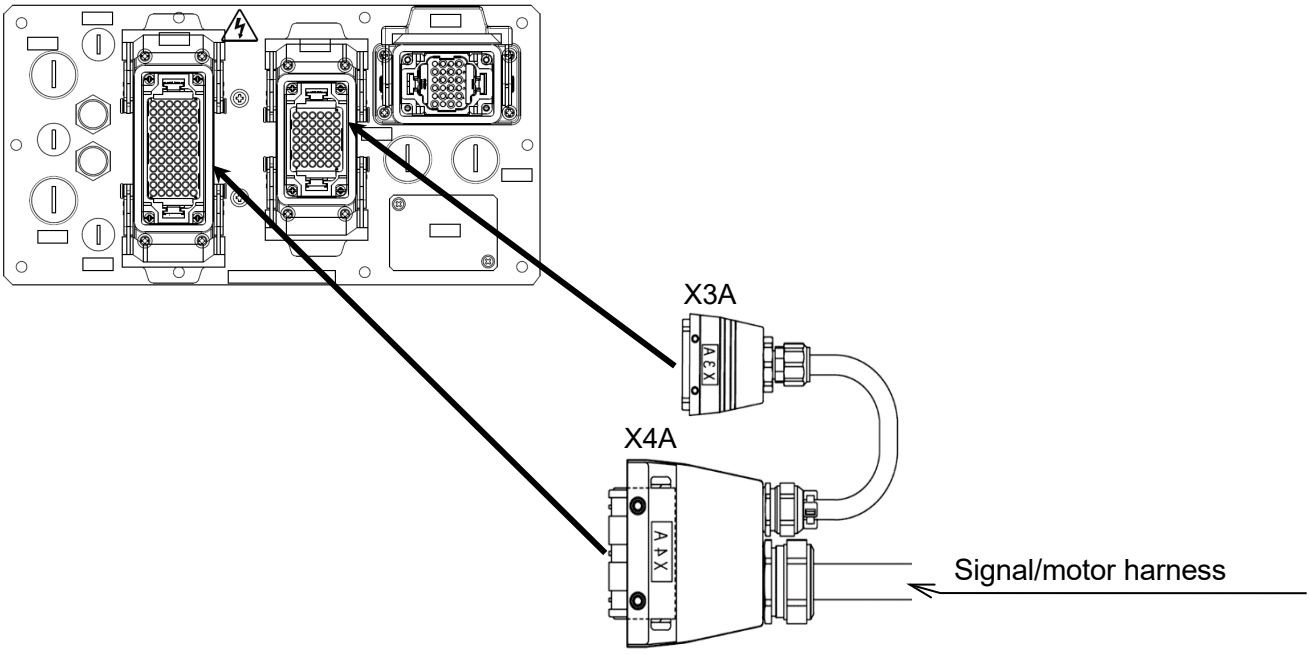

BU015X

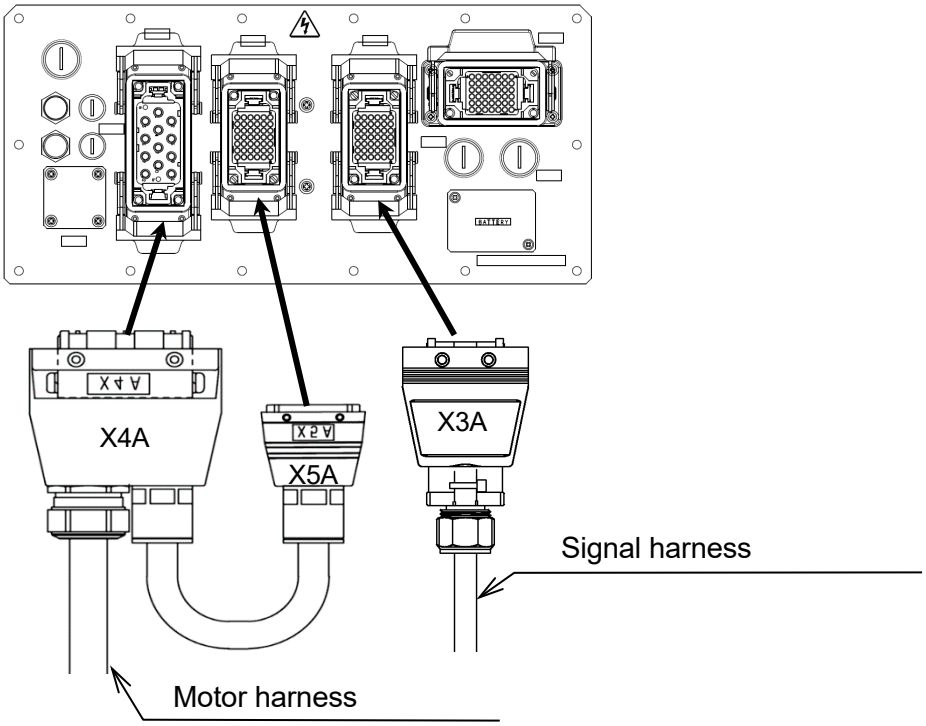

Refer to the table below for the outer dimensions, minimum bend radius and estimated weight of each cable.

■ Fixed harnesses

Controller	Connector name	Cable diameter (mm)	Minimum bend radius of cable (mm)	Estimated weight of cable (kg/m)
F01	XARM	23.6 to 24.6	145	0.875
F02	X3	10.0 to 10.6	64	0.137
	X4	22.3 to 25.4	150	1.253
F03	X3	10.0 to 10.6	64	0.137
	X4 (excluding CP110L)	20.5 to 24.0	138	1.058
	X5 (CP series (excluding CP110L))	23.2 to 24.4	143	1.145
	X5 (RD080)	16.8 to 20.0	221	0.639
	X4/X5(CP110L)	22.3 to 25.4	150	1.253
F04	X3	10.0 to 10.6	64	0.137
	X4	20.5 to 24.0	138	1.058
	X5	23.2 to 24.4	143	1.145

■ Moving harnesses

Controller	Connector name	Cable diameter (mm)	Minimum bend radius of cable (mm)	Estimated weight of cable (kg/m)
F01	XARM	25.5 to 27.5	159	0.890
F02	X3	8.9 to 9.9	56	0.109
	X4	23.5 to 25.5	150	1.150
F03	X3	8.9 to 9.9	56	0.109
	X4 (excluding CP110L)	22.8 to 23.8	142.8	1.015
	X5 (CP series (excluding CP110L))	25.0 to 27.2	156	0.963
	X5 (RD080)	20.0 to 22.0	126	0.630
	X4/X5(CP110L)	23.5 to 25.5	150	1.150
F04	X3 (MX series)	19.0 to 21.0	120.6	0.470
	X4 (MX series, X4A-1)	22.8 to 23.8	142.8	1.015
	X5 (MX series, X4A-2)	22.8 to 23.8	142.8	1.015
	X5 (MX series, X5A)	20.0 to 22.0	126	0.630
	X3 (MXP series)	8.9 to 9.9	56	0.109
	X4 (MXP series)	22.8 to 23.8	142.8	1.015
	X5 (MXP series)	25.0 to 27.2	156	0.963

Refer to the table below for the outer dimensions of each connector.

Controller	Connector name	Connector size (mm)		
		D	H	W
F01	XARM	57.0	144.9	96.7
F02	X3	24.4	75.6	61.6
	X4	57.0	144.9	96.7
F03	X3	24.4	75.6	61.6
	X4 (excluding CP110L)	57.0	144.9	96.7
	X4*1 (CP110L)	57.0	144.9	148.4
	X5*1	57.0	144.9	96.7
F04	X3	24.4	75.6	61.6
	X4	57.0	144.9	96.7
	X5	57.0	144.9	96.7

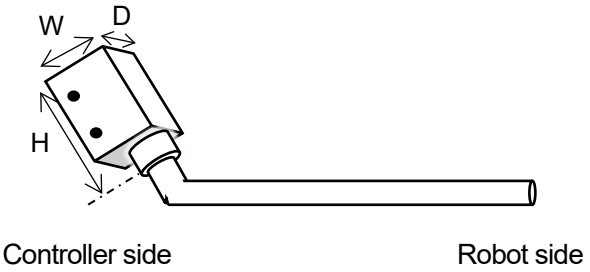

*1 The outer dimensions of the "F03 X4 (CP110L)" item are shown in the figure below. For the X4/X5 harnesses for CP110L, refer to the outer dimensions in the "F03 X4 (CP110L)" item in this table when considering hole dimensions for passing the harness.

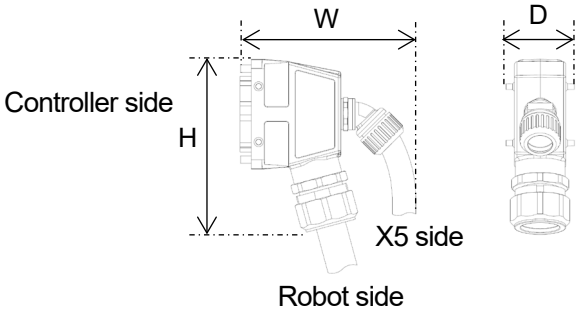

6.2 Connecting the Controller to the TP

Connect the TP cable to the controller and TP.

[NOTE]

- The TP cable has different male and female connections for the controller side and TP side. Confirm the connector to be inserted and do not force it in.
- Since the TP touch panel may malfunction, do not wire the TP cable close to or in parallel with cables that generate noise (example: robot power lines or high voltage power lines).

WARNING

If the TP is not connected to the robot controller, the EMERGENCY STOP switch on the TP is disabled. To avoid confusion with a TP with an enabled EMERGENCY STOP switch, store the unconnected TPs in an appropriate storage location described in section 1.1.

CAUTION

1. **When wiring the TP cable in the work area, secure and arrange the cable so that operators will not trip over it.**
2. **Install the TP cable properly, for example by housing and protecting it inside a duct, to prevent physical damage.**
3. **Do not pull the TP cable forcibly or push it into the gap between the safety fence rails, etc.**
4. **Take care not to drop the TP cable connector on the ground.**

1. Connect the TP cable to the controller connector. Do so by aligning the arrow on the controller with the arrow on the connector and inserting the connector.

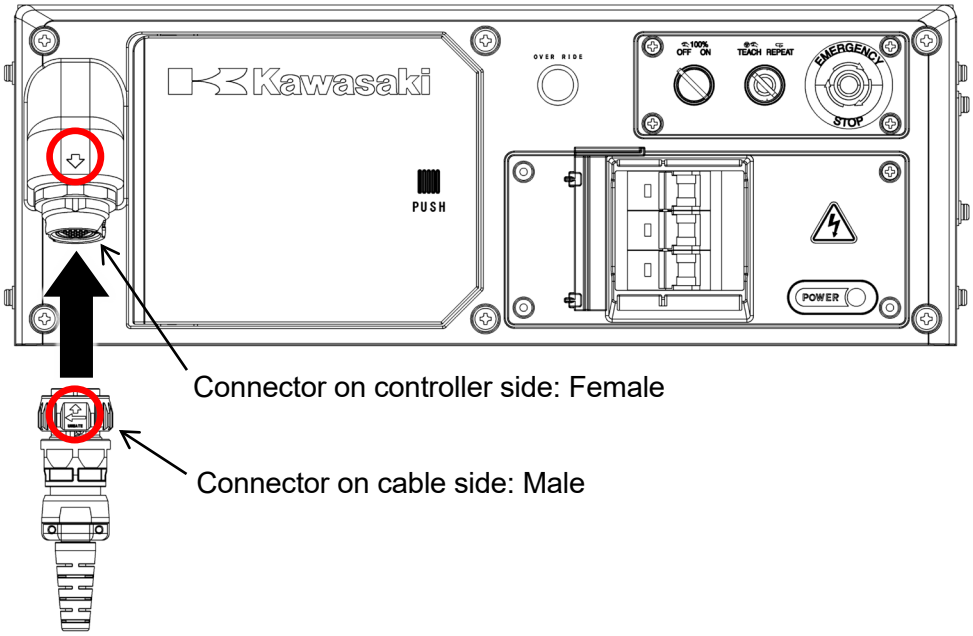

When removing the connector, hold the nut part of the connector and rotate approximately 30 degrees counterclockwise. Release the lock, then pull the connector straight out.

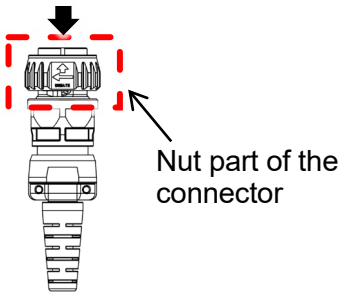

[NOTE]

Do not twist the connector further when the lock is released, or forcibly pull the connector before the lock is released. Doing so could damage the connector.

Rotating the nut part of the connector 60 degrees or more may damage the connector. Please contact Kawasaki for repairs.

2. Connect the TP cable to the TP connector. Do so by aligning the arrow on the TP with the arrow on the connector and inserting the connector.

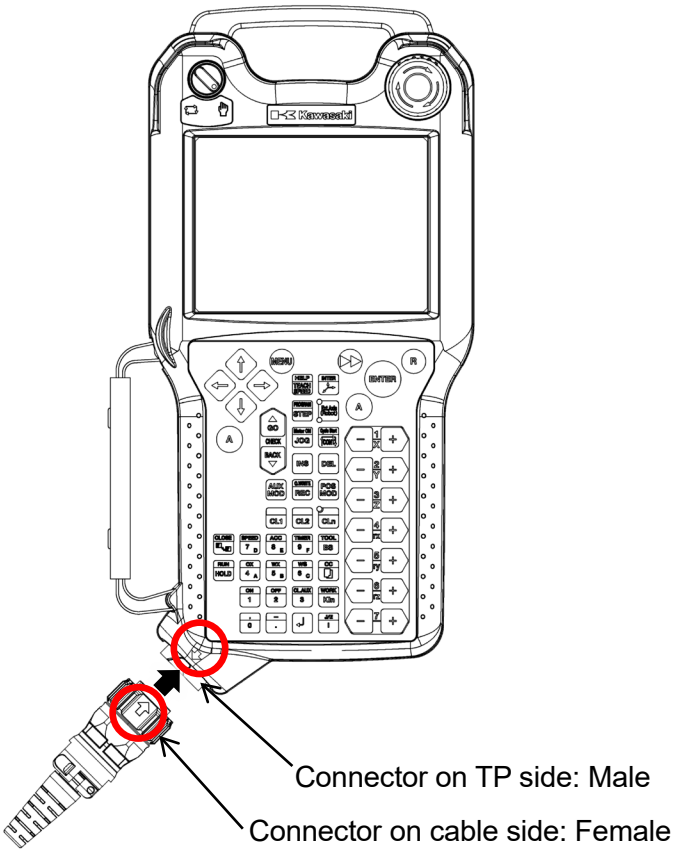

When removing the connector, hold the nut part of the connector and rotate approximately 30 degrees counterclockwise. Release the lock, then pull the connector straight out.

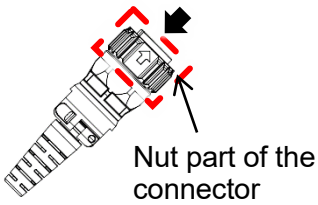

[NOTE]

Do not twist the connector further when the lock is released, or forcibly pull the connector before the lock is released. Doing so could damage the connector.

Rotating the nut part of the connector 60 degrees or more may damage the connector. Please contact Kawasaki for repairs.

Refer to the table below for the outer dimensions, minimum bend radius and estimated weight of the TP cable.

Cable diameter (mm)	Minimum bend radius of cable (mm)	Estimated weight of cable（kg/m）
7.1 to 8.1	46	0.080

Refer to the table below for the outer dimensions of the connector on the TP side.

Connector size (mm)	
D	W
33.4	101.2

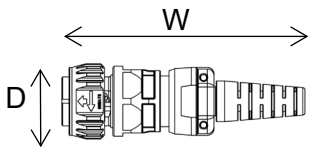

Same for controller and TP side

7 Connecting an External Power Supply

When connecting an external power supply, strictly observe the following cautions.

DANGER

1. **Before connecting an external power supply, make sure that the external power supply for the controller is turned off. Connecting while powered on could cause an electric shock.**
2. **Until the external power supply connection is completed, put a tag on the breaker indicating that work is in progress or assign another technician for supervision to ensure that the breaker will not be turned ON.**

WARNING

1. **Check that the specification of the power supply connected to the controller is the same as the stated specification on the rating plate. Connecting power supplies with different specifications may cause the internal electrical components to fail.**
2. **Always provide grounding as a countermeasure against electric shock and noise.**
   (1) **Dedicated grounding:**
   Dedicated class D grounding with a resistance of 100 Ω or less
   (2) **Recommended power cable size:**
   Ground wire of 3.5 to 5.5 mm^2 or more
   (For details, see "3.3 F0x Controller Specifications.")
3. **Grounding should never share ground wires or negative electrodes (base material) with welding machines, etc.**
4. **Be sure to observe the following when arc welding.**
   (1) **Connect the negative electrode (base material) on the power supply used for welding directly to the base material or to the jig.**
   (2) **Never have the main robot unit and the controller share grounding, and ensure they are grounded in isolation of each other.**
5. **Before turning on the external power supply, ensure that the power supply for the controller is connected securely, and that all covers are mounted correctly. Failure to do so could lead to electric shock.**

⚠ CAUTION

1. **Be sure to use an external power supply which meets the specifications of the controller for instantaneous power interruptions, voltage fluctuations and capacity, etc.**
   Connecting a power supply with a different specification could cause the power supply to be turned OFF by the power supply monitoring circuit, leading to an error. Especially when using a transformer unit, the instantaneous high load of the robot is more likely to cause decreases in controller power supply voltage. If errors such as a power decrease error occur when the robot is under high load, recheck the primary power supply voltage supplied to the transformer unit and the connection tap inside the transformer unit.
2. **If there is a risk of noise from the external power supply becoming mixed in, reduce the noise level by adding a noise filter or similar.**
3. **Check first that there are no devices with poor noise tolerance*1 in the vicinity.**
   Devices with poor noise tolerance can malfunction due to the effects of PWM noise generated by the robot motor.
4. **The robot's external power supply switch (breaker) should not be used in combination with welding machines or other power equipment.**
5. **To prevent electric leakages, a time-delay electric leakage breaker (with a current sensitivity of 100 mA or higher) should be used as the external power supply switch.**
6. **If there is a risk of voltage surges from the external power supply such as those caused by lightning surges, reduce the surge voltage level by adding a surge absorber or equivalent.**
7. **The surge protection device (SPD) used for the equipment must be compliant with NFPA79.**
8. **In the case of controllers with a regenerative charging function (if using an F03 controller or optional regenerative charging function), the peak values for voltage between the AC wires of the secondary breaker inside the controller may increase when the power supply breaker that supplies AC power to the controller during robot operation is cut off. Be aware of this if you have devices that share power with the controller from the same breaker.**

*1 Some devices are highly susceptible to voltage surges such as those from proximity switches directly connected to power supplies. Please bear this in mind.

When not using transformer units

■Work procedure

When connecting an external power supply, follow the procedure below.

1. Turn OFF the external power supply to the controller.

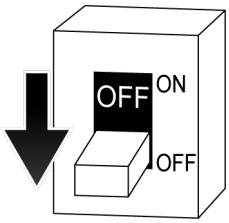

2. Turn the Controller Power switch to OFF.

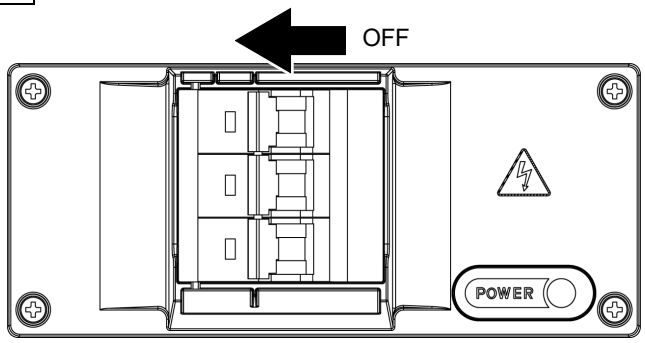

3. Open the front cover of the Controller Power switch.

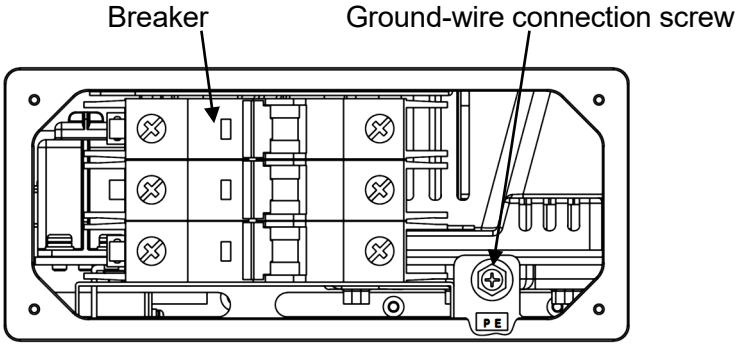

4. Run the external power cable from the external power supply inlet, which can be found on either the right side or rear of the controller.

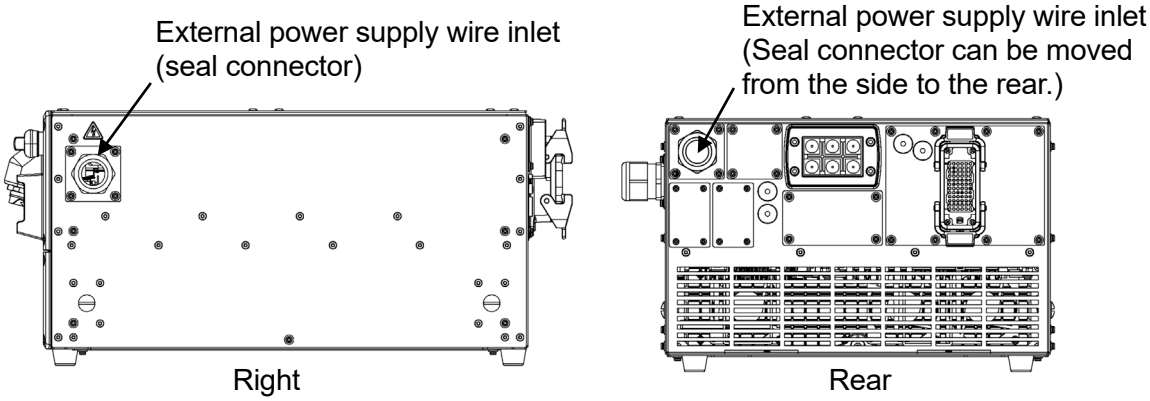

5. Connect the ground wire to the metal plate next to the breaker.

6. Connect the power cable to the location shown in the figure (right side of breaker).

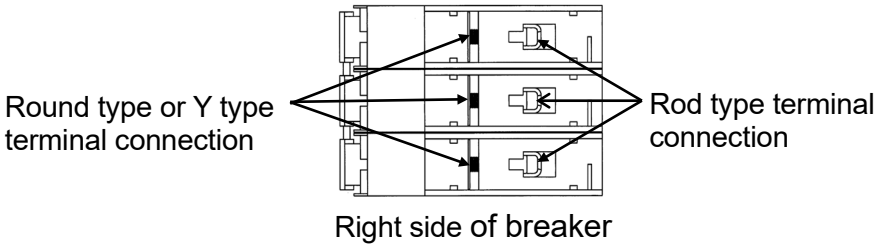

CAUTION

1. **Check the power supply capacity used before selecting a cable. (See "3 Controller External Appearance and Specifications.")**
2. **Note that there is the possibility of voltage drops or the cable heating up if the wire diameter is thin.**
3. **Ensure that the ground is grounded. Failure to do so could lead to electric shock in the event of electrical leakage.**

7. Reattach the front cover of the controller power switch detached in step 3.

■ Notes

- A seal connector for inserting external power supply wiring is provided on the right side of the controller. (Can also be moved to the rear.) Use power cables with a diameter of between ⌀16 and ⌀22.

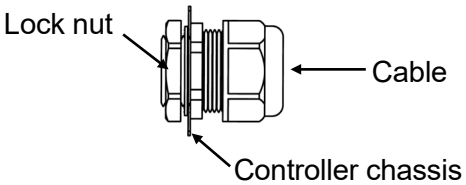

- Leave a cable sheath clearance of between 60 and 70 mm when inserting power cables from the right side of the controller.

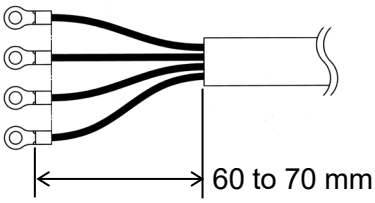

- Use a crimp terminal when connecting to breakers. Use terminals for M5 screws when using round or Y type terminals.

- Source separately a seal connector which matches the diameter of the cable if the cable diameter is larger than ⌀22. The wire inlet hole diameter on the external power supply plate is ⌀34.

- The electronic components inside the controller may fail if the seal connector is not used or if the seal connector does not match the cable diameter and a gap is created. Make sure to insert cables so that no gaps are created.

- For single-phase input (only some models), connect the power cable to the two locations on top as shown in the figure below (breaker right side).

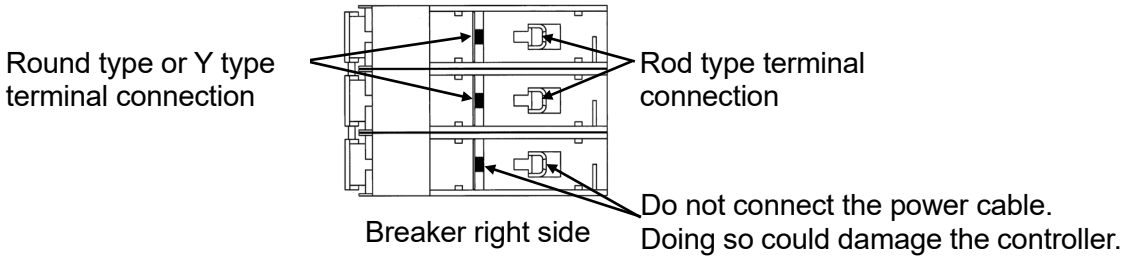

- Follow the route shown in the figure below when inserting external power cables from the rear.

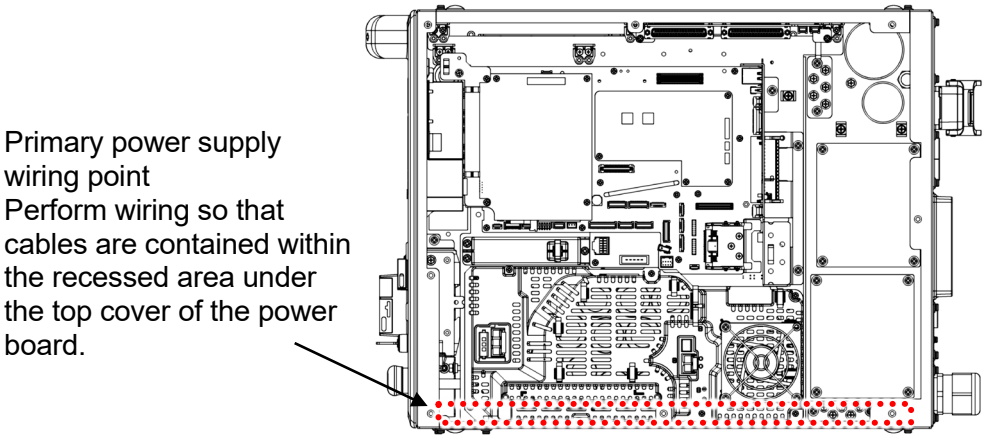

- An acrylic rod shaped part is attached to the front cover of the controller power switch. The wired power cables may interfere with the acrylic part, making the attachment of cover not possible, so please refer to the figure below to wire the power cables.

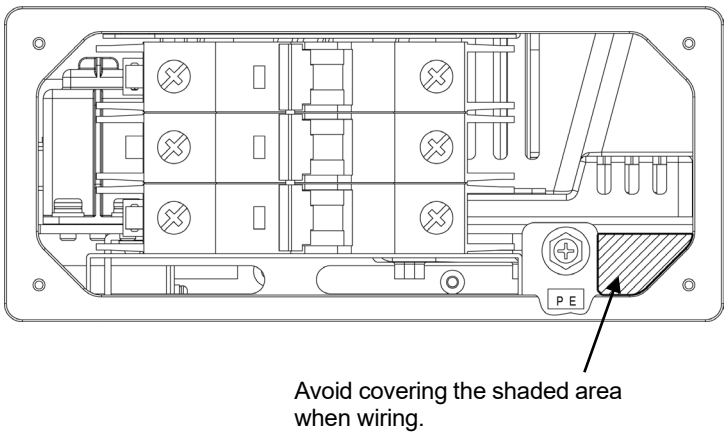

When using transformer units

■Notes

Two F01 controllers can be connected to a single transformer unit only when an F01 controller is used. When connecting two controllers, the parts that are to be connected will differ compared to when connecting only one controller. Perform connections after carefully reading the following procedure.

A. Connection between controller and transformer unit

Connect the dedicated power cable between the controller and the transformer unit using the following procedure. For items that are not specifically noted, use the same procedure to connect both controllers.

1. Turn OFF the external power supply to the controller.

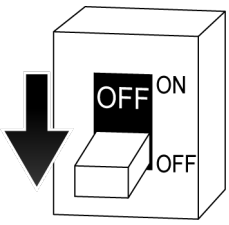

2. Turn the Controller Power switch to OFF.

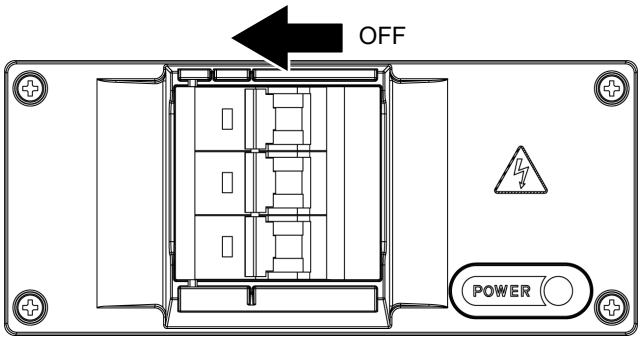

3. Open the top plate and front cover of the controller, remove the rear inlet plate (without seal connector) and side inlet wire plate (with seal connector), and attach the removed rear wire plate to the side inlet. The side inlet plate with seal connector will not be used.

4. Route the power cable (part number: 50979-3783) through the rear inlet and up to the breaker, as indicated by the wiring route shown in the following figure. When doing so, make sure that the rear seal connector is securely tightened.

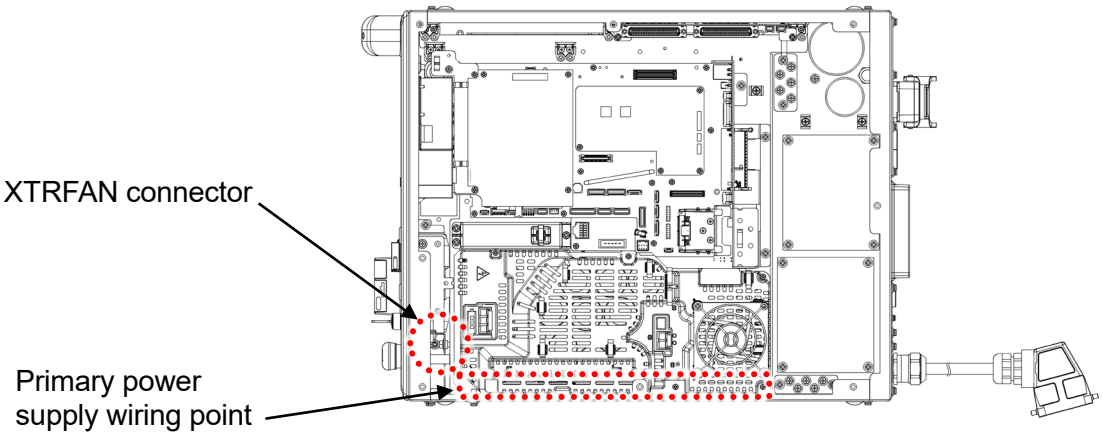

5. Disconnect the existing jumper connector of the "XTRFAN" connector inside the controller and connect the connector attached to the power cable. (The removed jumper connector will not be used.)

CAUTION

- **The cable (XOUT1) from the first robot controller drives the fan inside the transformer unit. When connecting two controllers, be aware that the fan inside the transformer unit will not operate when the power for the first controller is OFF and power for the second controller is ON.**
- **When connecting two controllers, connect the connector attached to the power cable to the "XTRFAN" connector on the first robot controller. Connect the existing jumper connector to the "XTRFAN" connector located inside the second robot controller. (Do not connect the connector for the power cable.)**

6. Connect the ground wire to the metal plate next to the breaker.

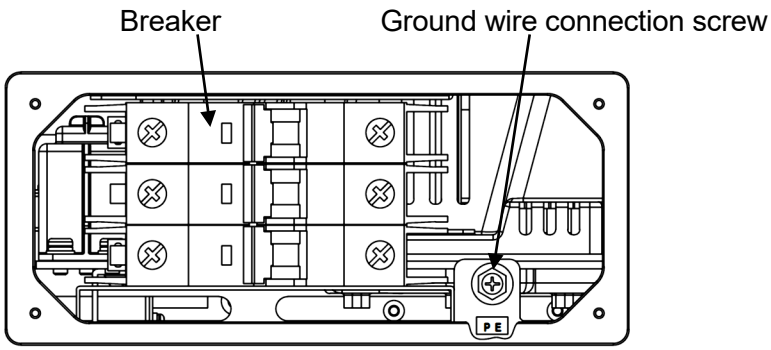

7. Connect the power cable to the location shown in the figure (right side of breaker).

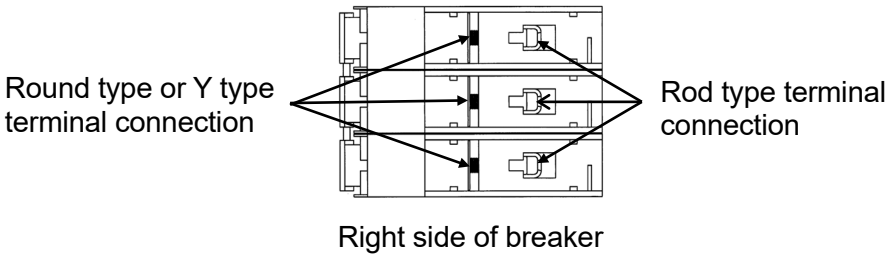

8. Close the top plate and front cover.

B. Connection between external power supply and transformer unit (when connecting one controller)

Connect the external power supply and transformer unit using the following procedure.

1. Turn OFF the external power supply to the controller.

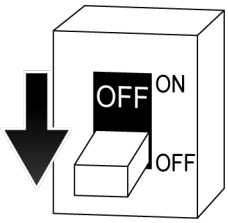

2. Turn the transformer unit Controller Power switch to OFF.

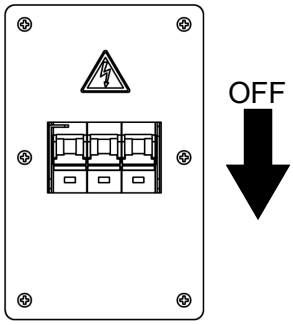

3. Remove the top plate and front cover of the transformer unit, as well as the metal plate for the rear external power supply inlet. Then connect the controller power cable to the XOUT1 connector.

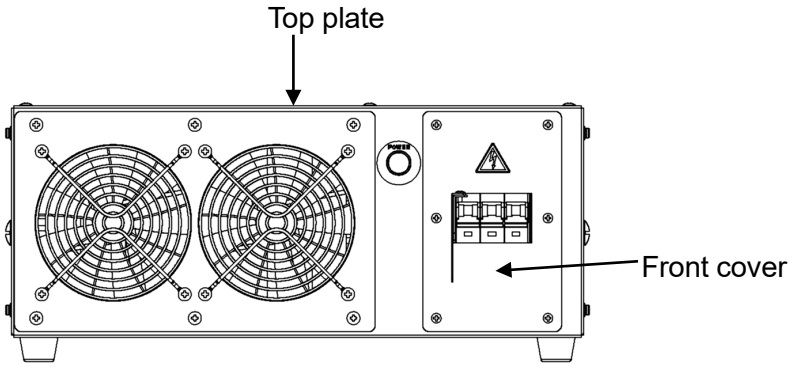

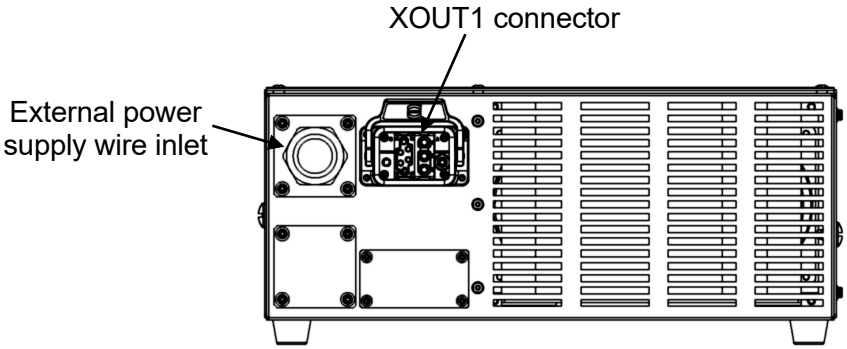

4. Route the power cable through the rear inlet before routing the cable to the breaker as indicated by the wiring route shown in the following figure. When doing so, make sure that the rear seal connector is securely tightened.

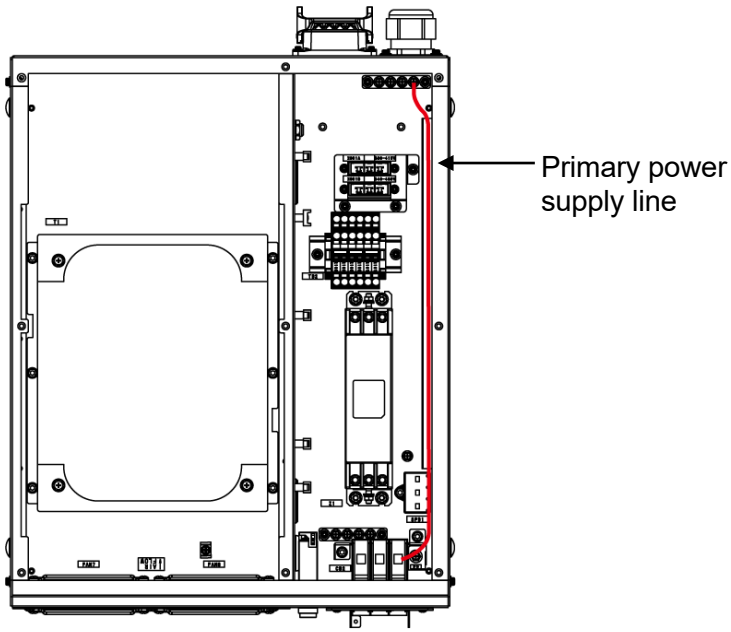

5. Connect the power cable ground to the PE terminal next to the breaker.

DANGER

The breaker will be wired from the top. Never touch the breaker terminal when it is energized and the top plate is open.

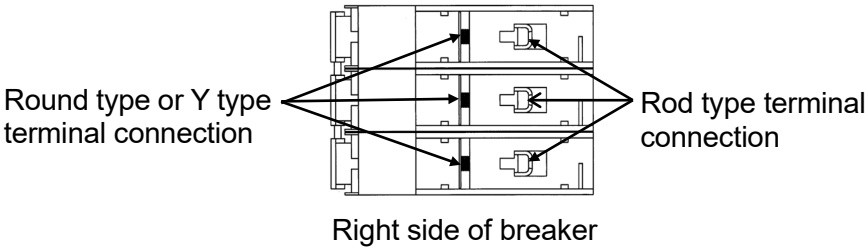

6. Connect the power cable to the location shown in the figure (right side of breaker).

7. Connect the X601 power tap connector to match the working voltage. (Be sure to check the input voltage range shown under "3.3 F0x Controller Specifications.")

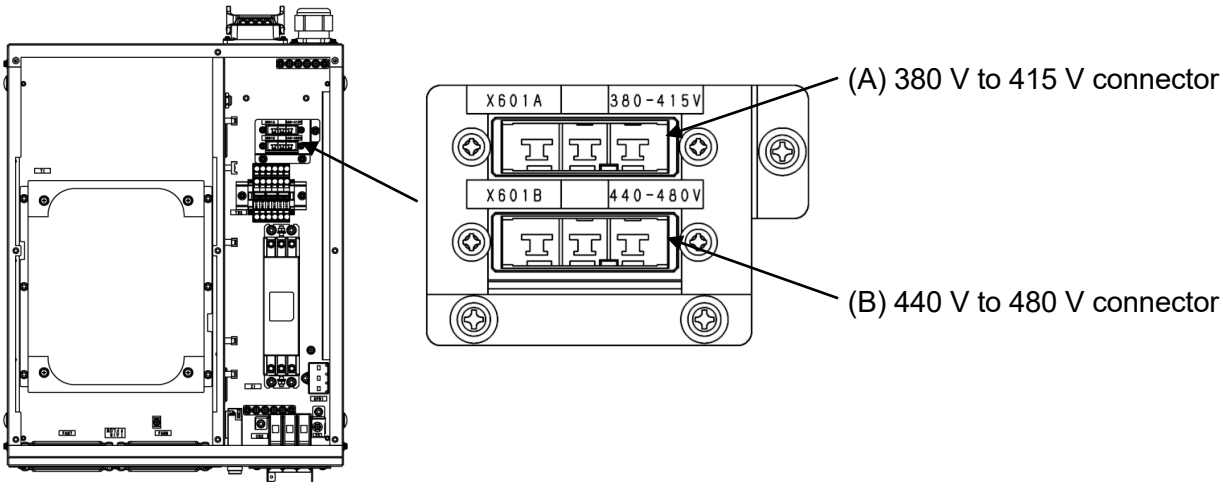

8. Close the top plate and front cover.

- A seal connector for inserting external power supply wiring is provided on the rear of the transformer unit. Use power cables with a diameter of between ⌀16 and ⌀22.

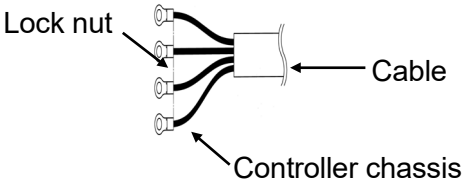

- Leave a cable sheath clearance of less than 150 mm when inserting the power cables.

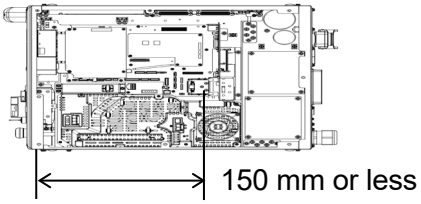

Note Source separately a seal connector which matches the diameter of the cable if the cable diameter is larger than ⌀22. The hole diameter on the metal plate for the transformer unit cable entry point is ⌀34.

CAUTION

1. **Check the power supply capacity used before selecting a cable. See "3 Controller External Appearance and Specifications."**
2. **Note that there is the possibility of voltage drops or the cable heating up if the wire diameter is thin.**
3. **After connecting the transformer unit and controller, confirm that the two transformer unit fans rotate normally when the controller power switches of the transformer unit and controller are ON.**

C. Transformer unit wiring when connecting two controllers

1. Turn OFF the external power supply to the controller.

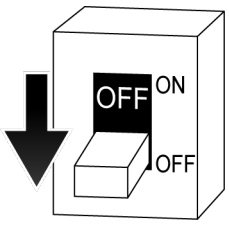

2. Turn the transformer unit Controller Power switch to OFF.

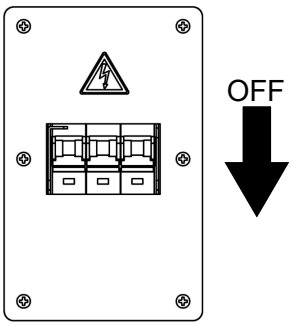

3. Route the power cable using the procedure described in steps 3 through 7 under "B. Connection between external power supply and transformer unit."
4. Remove the blank plate located on the rear of the transformer unit.

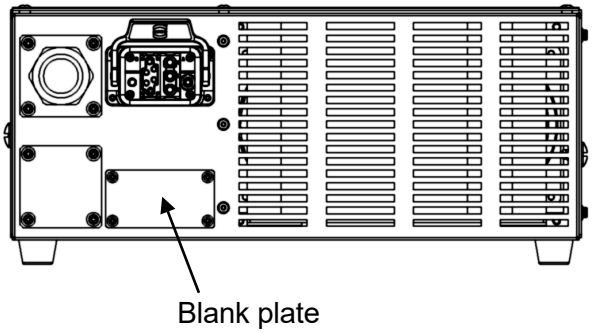

5. Attach the optional XOUT2 cable (part number: 50977-6317) to the location of the blank plate removed in step 4 before connecting the controller power cable to the XOUT1 and XOUT2 connectors.

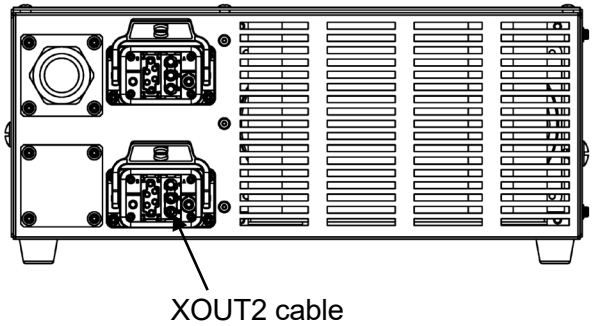

6. Connect the end of the XOUT2 cable to the terminal block inside the transformer unit using a tool such as a slotted screwdriver.

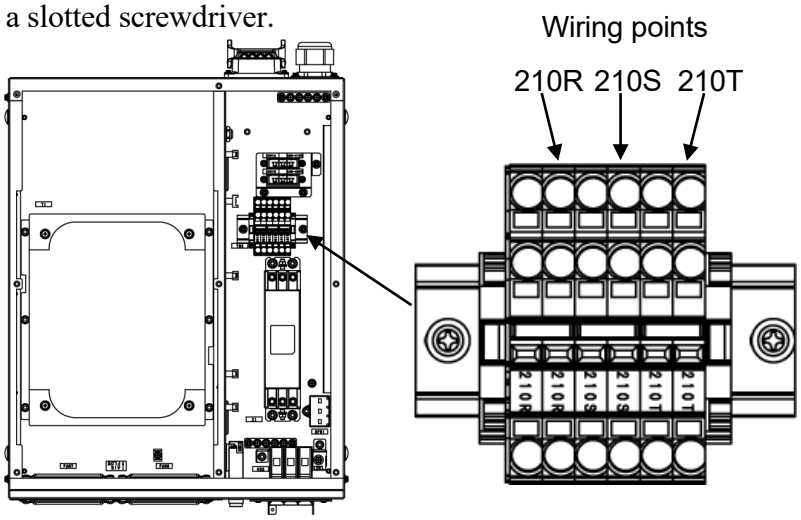

7. Tie the XOUT2 cable at the location shown in the figure below.

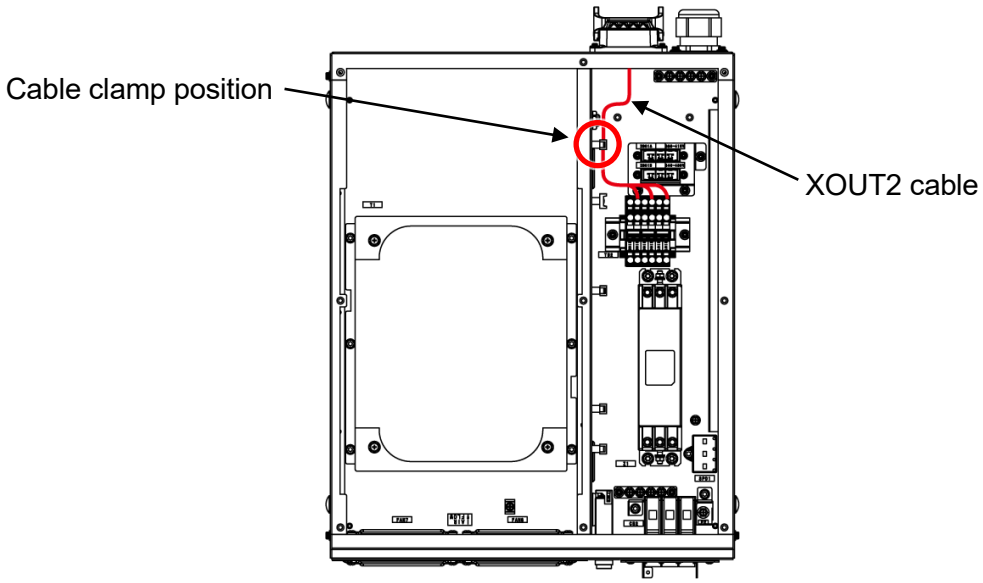

8. Close the top plate of the transformer unit.

CAUTION

- **The cable (XOUT1) from the first robot controller drives the fan inside the transformer unit. When connecting two controllers, be aware that the fan inside the transformer unit will not operate when the power for the first controller is OFF and power for the second controller is ON.**
- **When connecting two controllers, connect the connector attached to the power cable to the "XTRFAN" connector on the first robot controller. Connect the existing jumper connector to the "XTRFAN" connector located inside the second robot controller. (Do not connect the connector for the power cable.)**

8 Peripheral Control Machinery and Equipment Connection

For details of connection methods, see the "External I/O Manual."

8.1 Cautions to Observe When Connecting

DANGER

1. **Prior to connecting the external I/O, check to make sure that the controller and external devices are all powered off. Connecting while powered on could cause an electric shock.**
2. **Until the external I/O connection is completed, put a tag on the breaker indicating that work is in progress or assign another technician for supervision to ensure that the breaker will not be turned ON.**

■ Measures to ensure that controller power is not turned on while work is in progress

Applicable machine: F0x controller
Lock the controller by inserting the included resin bracket for locking into the designated position.

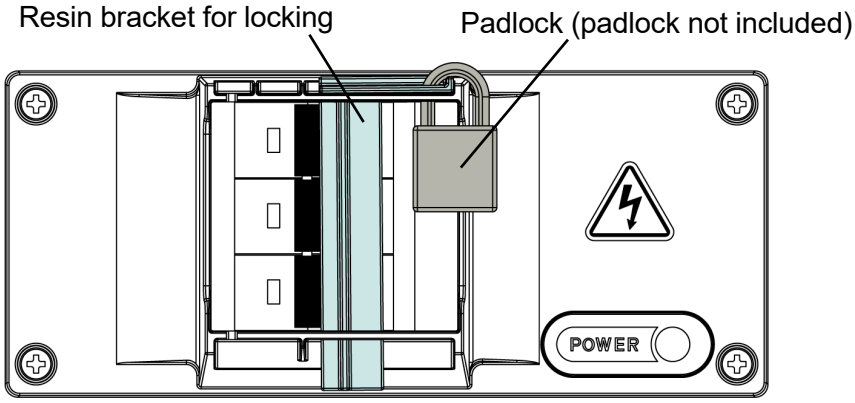

Controller

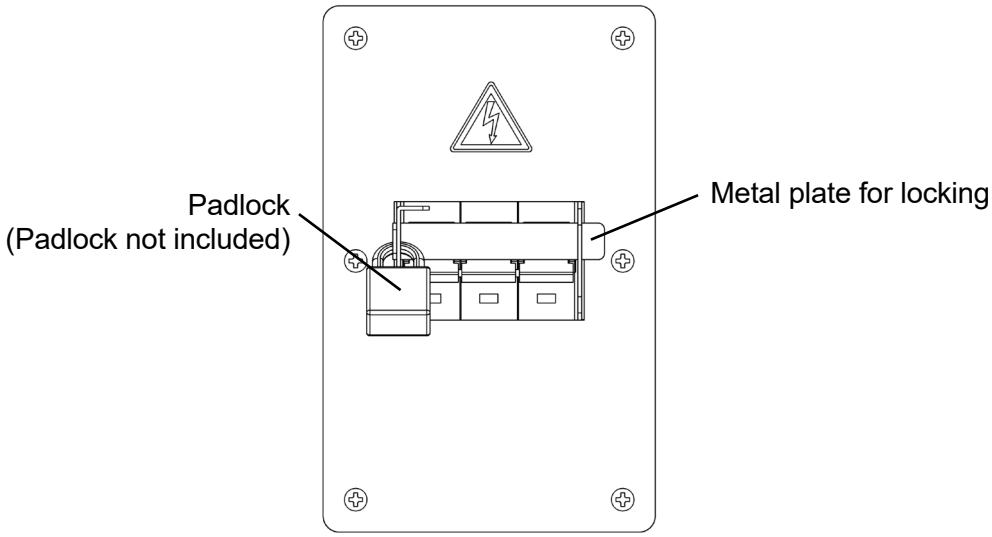

Transformer

CAUTION

1. **Be sure to implement noise countermeasures on the machinery to which the external I/O is connected.**
   Noise can cause malfunctions and damage to electrical systems.
2. **Be sure to connect the external I/O signals to the correct connector pin numbers. Forcing a connection may lead to connector damage or electrical system failure.**
3. **Be sure not to place external I/O cables on top of or under objects, or in places where they could be stepped on by people or run over by vehicles (forklifts, etc.).**
   Stepping on or running over a cable could damage it or cause electrical system failure.
4. **Wire external I/O cables with a clearance of at least 20 cm, so that they do not run close to or in parallel with power lines (internally or externally).**
   If noise gets into an I/O cable it can cause malfunctions.
5. **Use shielded cables for external I/O cables when connecting them to machine casings.**
6. **When connecting an external I/O cable to a terminal block or connector, use a tying band to secure it to the cable support at the top of the inner face of the controller, to prevent excessive force being applied.**

When connecting external I/O cables to the controller, use the cable entry located in the cable inlet to ensure the controller is protected from dust. Refer to the following for instructions on its use.

■ External I/O cable wiring procedure

1. Turn OFF the external power supply to the controller.

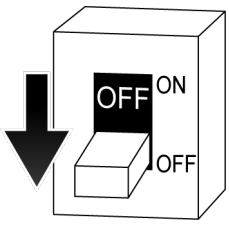

2. Turn the Controller Power switch to OFF.

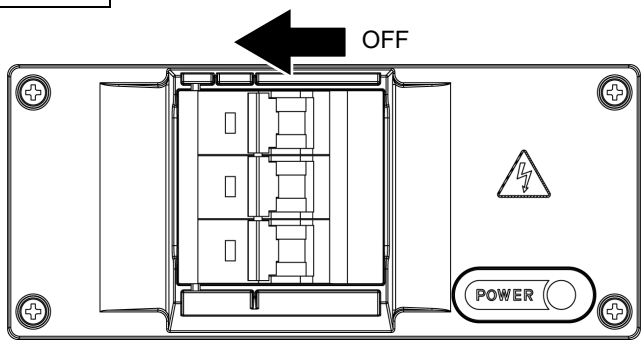

3. Remove the top plate from the controller.

4. Remove the cable entry located on the rear of the controller.

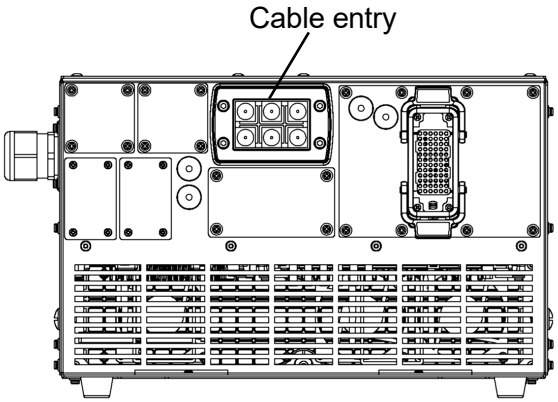

5. Separate the frame, lattice part, and sealing part of the removed cable entry.

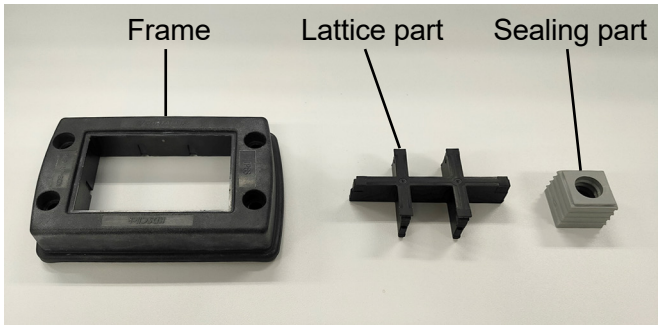

6. Attach the cable entry frame to the controller.

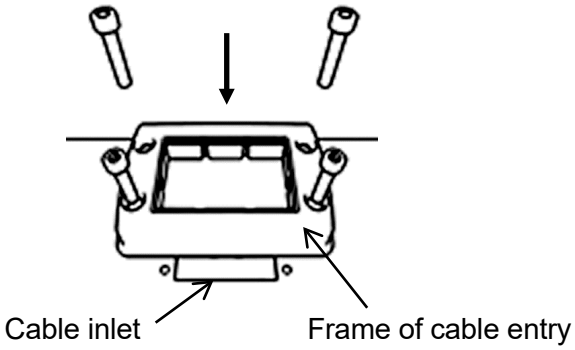

7. Pull the external I/O cables into the controller from the cable inlet.

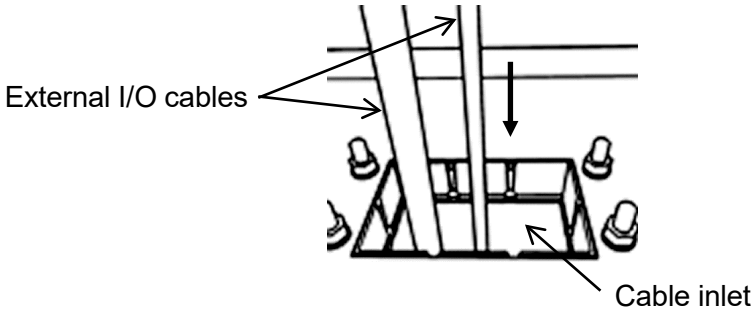

8. Attach the lattice part of the cable entry to the cable inlet. When doing so, press down until a click is heard.

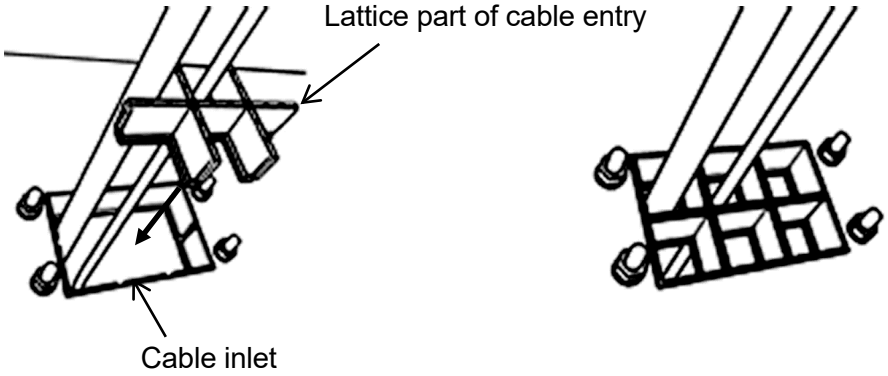

9. Attach the sealing part of the cable entry to the cable.

10. Push the sealing part of the cable entry into the lattice part until it is fully seated.

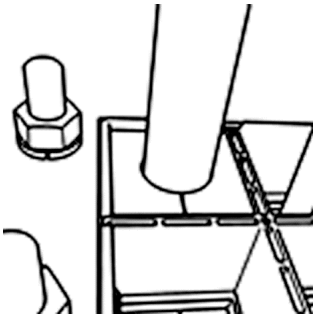

11. Connect the external I/O cable shield to the tap (recommended) or the shield plate on the rear of the controller. Connect the welding cable shield to the tap on the rear of the controller.

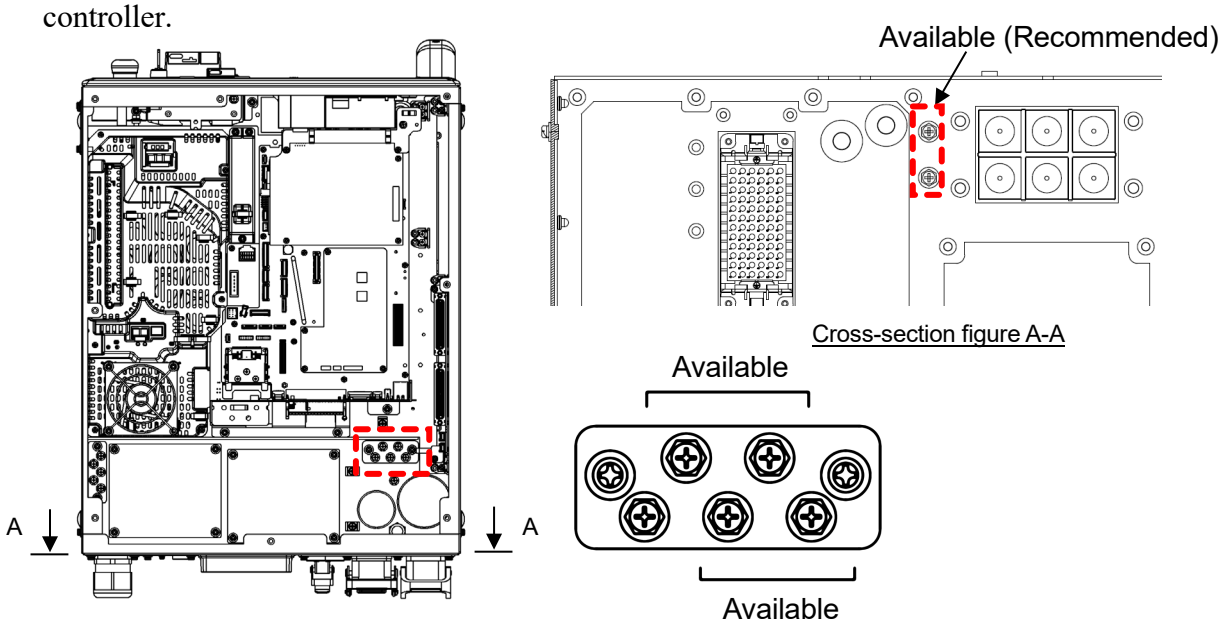

12. Tie the external I/O cables to the cable clamping position on the controller.

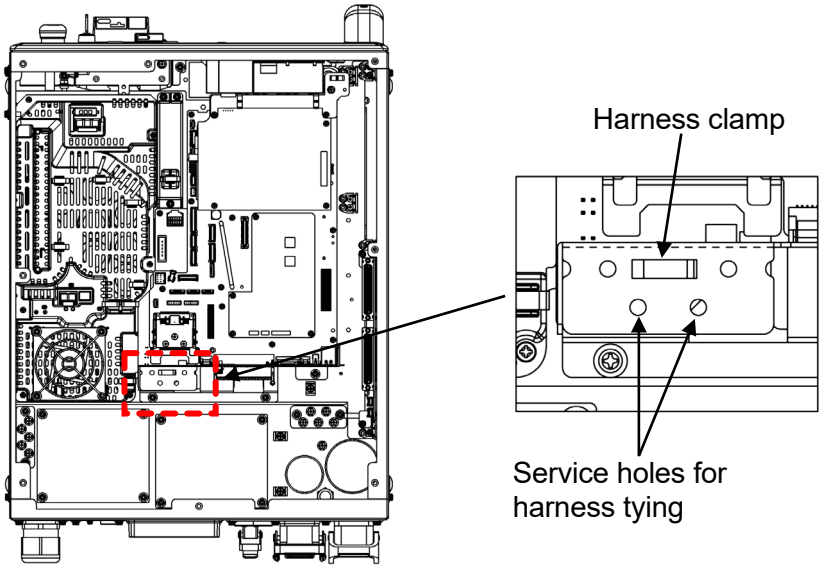

13. Attach the top plate to the controller.

■ Notes

- Use external I/O cables with a diameter of ⌀11 to 12 mm. If using cables of a smaller size, insert them into the cable entry using the set of sealing parts of the cable entry provided optionally, or with them held between grommets, etc.
- If placing the controller in a rack or other similar location, it may not be possible to remove the top plate unless the controller is pulled out from the rack. Because external I/O cables cannot be removed unless the top plate is removed, adjust the length of the external I/O cables so that the controller can be pulled out if it is to be placed in a rack or other similar location.

8.2 General Purpose Signal Connection

For details of connection, see the "External I/O Manual."

8.3 Hardware-Dedicated Signal Connection

If the external emergency stop signal and the external hold signal are connected to the XES terminal block provided on the servo board (2FB board) inside the controller, a safety circuit can be configured using a hardware circuit.
For details of connection, see the "External I/O Manual."

8.4 Safety Signal Connection

For details of connecting using safety I/O board for the B-type, S-type controller, see the “External I/O Manual” and “CoreCubic-S Instruction Manual” (90201-1489).
When connecting safety network devices and Ethernet/IP Safety, connect to the Ethernet port shown below. (Supported connector: RJ45 connector)
For details of the settings, see the “CoreCubic-S Instruction Manual” (90201-1489).

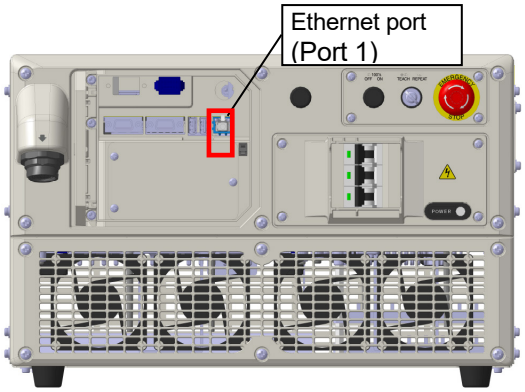

Front

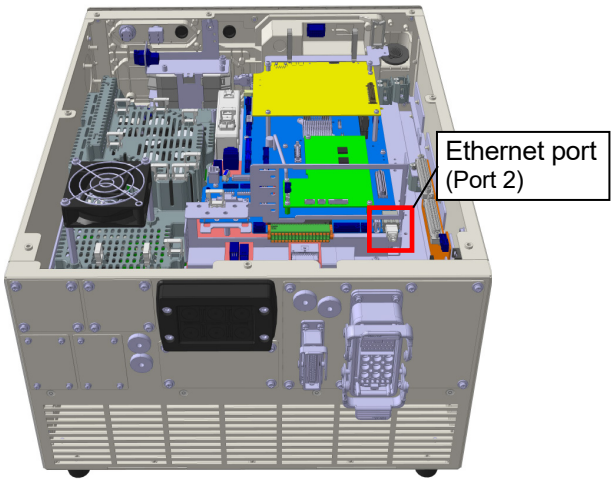

Rear

8.5 PC Connection

If a personal computer (PC) is connected, it can be used as a robot controller terminal.
For details, refer to "AS Language Reference Manual."

- Connect a PC onto which KRterm/KCwin32 terminal software has been loaded, to the RS-232C port in the accessory panel, using an RS-232C cable.
- Connect a PC onto which KRterm/KCwin TCPIP terminal software has been loaded, to the Ethernet port in the accessory panel, using an Ethernet cable.

8.6 RS-232C Serial Signal Connection (Optional)

If you connect a host computer or equivalent to the RS-232C port in the accessory panel, using an RS-232C cable, you will be able to use data communication. For details, refer to "Communication Option Manual."

8.7 Ethernet Communication Signal Connection

Using the Ethernet port in the accessory panel, you can build a 10BASE-T, 100BASE-TX or 1000BASE-T Ethernet LAN. For details, refer to "Communication Option Manual."

8.8 Fieldbus Connection (Optional)

Adding the fieldbus communication module (optional) to the XAB connector on top of the servo board (2FB board) inside the controller makes it possible to communicate with peripheral devices using a fieldbus network such as DeviceNet.
For details, see the "General Fieldbus I/O Usage Manual."

Kawasaki Robot Controller F0x Series Controller

Installation and Connection Manual

2021-02 : 1st Edition

2026-05 : 9th Edition

Publication : Kawasaki Heavy Industries, Ltd.

90202-1252DEI

Copyright © 2021 Kawasaki Heavy Industries, Ltd. All rights reserved.