Simple and friendly

Kawasaki

Kawasaki Robot
RS007

Installation and Connection Manual

Robot

Kawasaki Heavy Industries, Ltd.

90202-1250DEB

Preface

This manual describes installation and connection procedures for Kawasaki Robot RS007.

Be sure to fully understand the content of this manual and pay attention to the safety items in this manual and the separate "Safety Manual" when performing an operation. Note that this manual only provides descriptions of the installation and connection procedures for the arm. Also see the "Installation and Connection Manual" for the controller and "Installation and Connection Manual (Arc Welding Edition)" for the arc welding robot.

Again, do not perform any kind of work until you fully understand all of the contents of this manual. Also, Kawasaki is not responsible for damages or problems that occur as a result of performing work after referring to specific pages only.

This manual is applicable to the following robot arms.

RS007N, RS007L

The above applicable robots are further divided into RS007N/L-A and RS007N/L-B, so please check the model number (“Model”) on the nameplate, which is affixed on the robot unit. Please contact Kawasaki’s sales or service personnel for further details.

1. This manual does not constitute a guarantee of the systems in which the robot is utilized. Accordingly, Kawasaki is not responsible for any accidents, damages, and/or problems relating to industrial property rights as a result of using the system.
2. It is recommended that all personnel assigned for activation of operation, teaching, maintenance or inspection of the robot attend the necessary education/training course(s) prepared by Kawasaki, before assuming their responsibilities.
3. Kawasaki reserves the right to change, revise, or update this manual without prior notice.
4. This manual may not, in whole or in part, be reprinted or copied without the prior written consent of Kawasaki.
5. Store this manual with care and keep it available for use at any time. If the robot is reinstalled or moved to a different site or sold off to a different user, attach this manual to the robot without fail. In the event the manual is lost or damaged severely, contact Kawasaki.

Copyright © 2020 Kawasaki Heavy Industries Ltd. All rights reserved.

Symbols

The items that require special attention in this manual are designated with the following symbols.

Ensure proper and safe operation of the robot and prevent physical injury or property damages by complying with the safety matters given in the boxes with these symbols.

⚠ DANGER

Failure to comply with indicated matters can result in imminent injury or death.

⚠ WARNING

Failure to comply with indicated matters may possibly lead to injury or death.

⚠ CAUTION

Failure to comply with indicated matters may lead to physical injury and/or mechanical damage.

[NOTE]

Denotes precautions regarding robot specification, handling, teaching, operation, and maintenance.

⚠ WARNING

1. **The accuracy and effectiveness of the diagrams, procedures, and detail explanations given in this manual cannot be confirmed with absolute certainty. Accordingly, it is necessary to give one's fullest attention when using this manual to perform any work.**
2. **Safety related contents described in this manual apply to each individual work and not to all robot work. In order to perform every work in safety, read and fully understand the "Safety Manual," all pertinent laws, regulations and related materials as well as all the safety explanation described in each chapter, and prepare safety measures suitable for actual work.**

Table of Contents

Preface i
Symbols ii
1 Precautions 1
1.1 Precautions During Transportation, Installation and Storage 1
1.2 Installation Environment 2
1.3 Residual Risk When Operating 3
2 Arm Installation and Connection Work Flow 4
3 Motion Range and Specifications 5
3.1 Determination of Safety Fence Installation Location from Motion Range 5
3.2 Motion Range and Specifications 6
4 Transportation Methods 8
4.1 Wire Hoisting (Without Base Plate) 8
4.2 Wire Hoisting (With Base Plate) 9
5 Base Installation Dimensions 10
6 Installation Method of Robot Pedestal 11
7 Installation Method 12
7.1 Installing the Base Directly on the Floor 12
7.2 Installing the Robot Pedestal on the Floor 13
7.3 Installing the Robot Base Plate on the Floor (Without Pedestal) 14
7.4 Installing the Robot Base Plate on the Floor 15
8 Installation of Tools 16
8.1 Wrist Tip (Flange Surface) Dimensions 16
8.2 Mounting Bolt Specifications 16
8.3 Load Capacity 17
9 Mounting External Equipment 19
9.1 Service Tapped Hole Positions 19
9.2 Calculation of Load Caused by External Equipment 22
10 Connection of Air System 24
10.1 Air Piping 24
10.2 Air Supply to the Robot Arm 25
10.3 Tubing from Air Outlet to Hand 27

1 Precautions

1.1 Precautions During Transportation, Installation and Storage

When transporting the Kawasaki Robot to its installation site, strictly observe the following cautions.

⚠ WARNING

1. **When the robot arm is to be transported by using a crane or forklift, never support the robot arm manually.**
2. **During transportation, never climb on the robot arm or stay under the hoisted robot arm.**
3. **Prior to installation, turn OFF the controller power switch and the external power switch for shutting down power supply to the controller. Display signs indicating clearly "Inspection and maintenance is in progress", and lock out/tag out the external power switch to prevent accidents of electric shock etc. caused when someone accidentally turns ON the power.**
4. **Prior to moving robot, ensure safety by first confirming no abnormality is observed in installing condition, etc., and then turn ON motor power to set robot to the desired pose. Be careful not to be caught by/between any moving parts due to careless approach to robot and peripheral equipment. After setting robot to the specified pose, turn OFF the controller power and the external power switch again as mentioned above. Display signs indicating clearly "Inspection and maintenance is in progress," and lock out/tag out the external power switch before starting installation and connection.**

⚠ CAUTION

1. **Since the robot arm is composed of precision parts, be careful not to apply excessive shocks or vibrations during transportation.**
2. **Prior to installation, remove all obstacles so the installation is carried out smoothly and safely. Clear a passage to the installation area for transportation of the robot arm using a crane or forklift.**
3. **During transportation and storage,**
   - **(1) Keep the ambient temperature within the range of -10 to 60°C,**
   - **(2) Keep the relative humidity within the range of 35 to 85% RH without dew condensation,**
   - **(3) Keep free from excessively strong vibration.**

1.2 Installation Environment

The robot arm must be installed in a place that satisfies all the following environmental conditions:

1. When robot is installed on the floor, the levelness must be within ±5°.
2. Be sure that the installation floor/pedestal has sufficient rigidity.
3. Secure a flatness to prevent undue force applied to the installation section. (If sufficient flatness is unobtainable, insert liners and adjust the flatness.)
4. Keep the ambient temperature during operation within the range of 0 to 45°C. (Deviation or overload error may occur due to high viscosity of grease/oil when starting operation at low temperatures. In this case, move the robot at low speed before regular operation.)
5. Keep the relative humidity during operation within the range of 35 to 85%RH without dew condensation.
6. The robot installing place should be free from dust, dirt, oil, smoke, water, and other foreign matters.
7. The robot installing place should be free from flammable or corrosive liquid or gas.
8. The robot installing place should be free from excessively strong vibration. (0.5 G or less)
9. The robot installing place should be free from electric noise interference.
10. The robot installing place should be sufficiently larger than the motion range of robot arm.
    (1) Install safety fence so the maximum movement of fully equipped robot arm (with hand and gun) does not cause interference.
    (2) Minimize the number of entrance gates (only one is best) and equip the entrance gate with a safety plug.
    (3) Observe the requirements of ISO 10218, etc. established in each region for details of the safety fence.

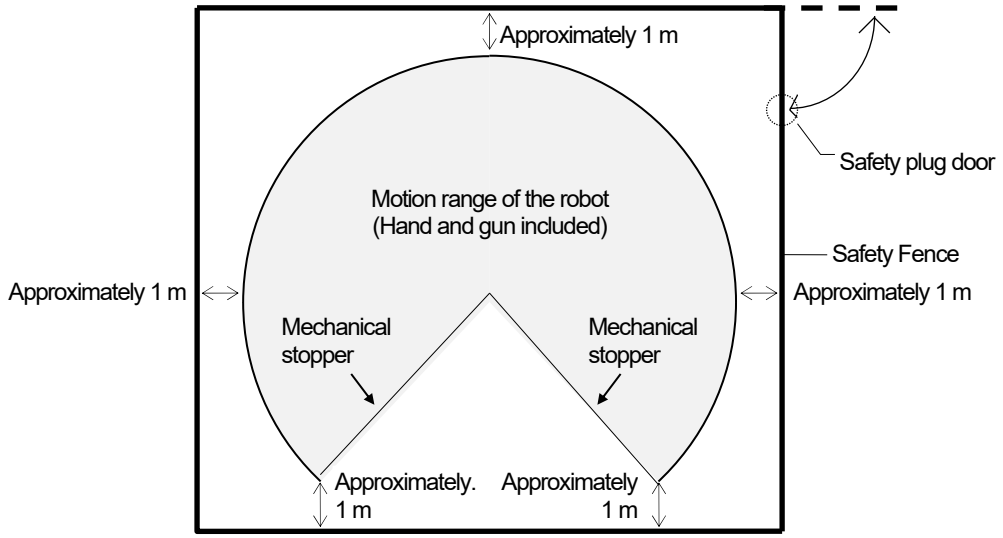

1.3 Residual Risk When Operating

WARNING

Pay attention to the residual risk areas described in the figures below during operation.

- **High-temperature parts may remain at 60°C or higher even after operation has stopped, so direct contact may cause burns. Wear heat-resistant gloves when working on these parts.**
- **Electric shock danger areas are subject to voltages of 200 V or more when the power is ON. To prevent electric shock, check the power status beforehand.**

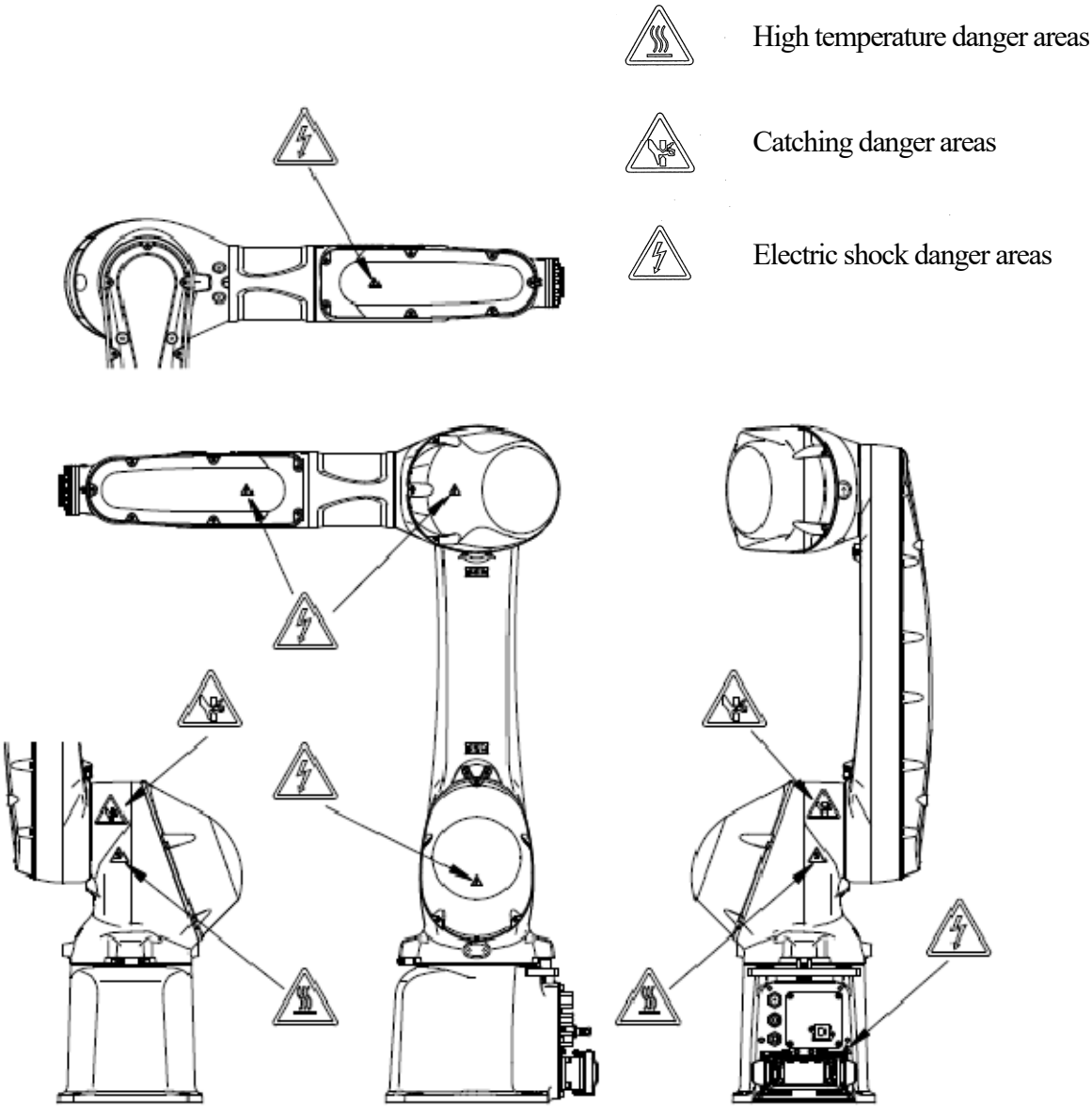

2 Arm Installation and Connection Work Flow

This workflow describes only the robot arm section. For the controller, refer to "Installation and Connection Manual" for controller.

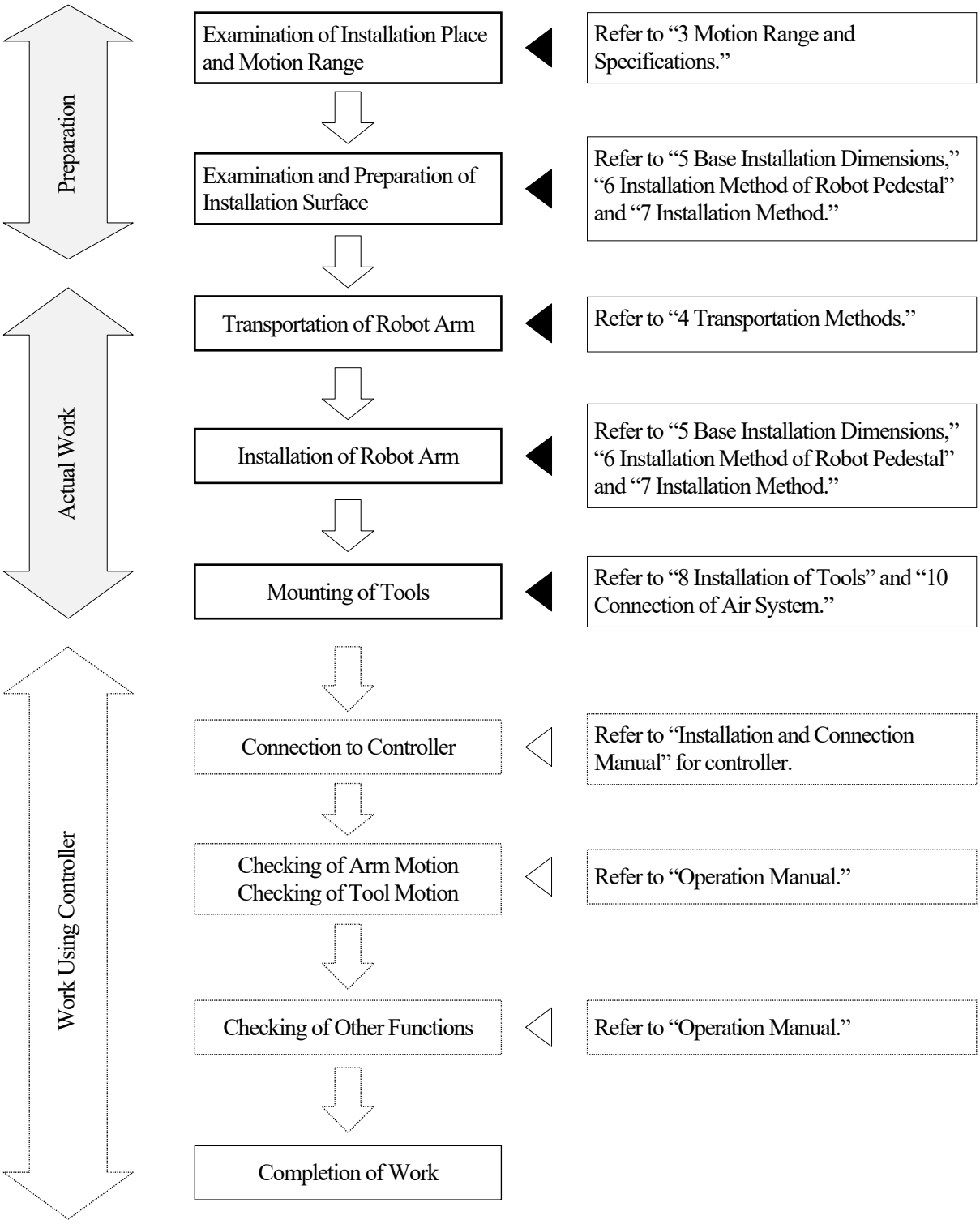

3 Motion Range and Specifications

3.1 Determination of Safety Fence Installation Location from Motion Range

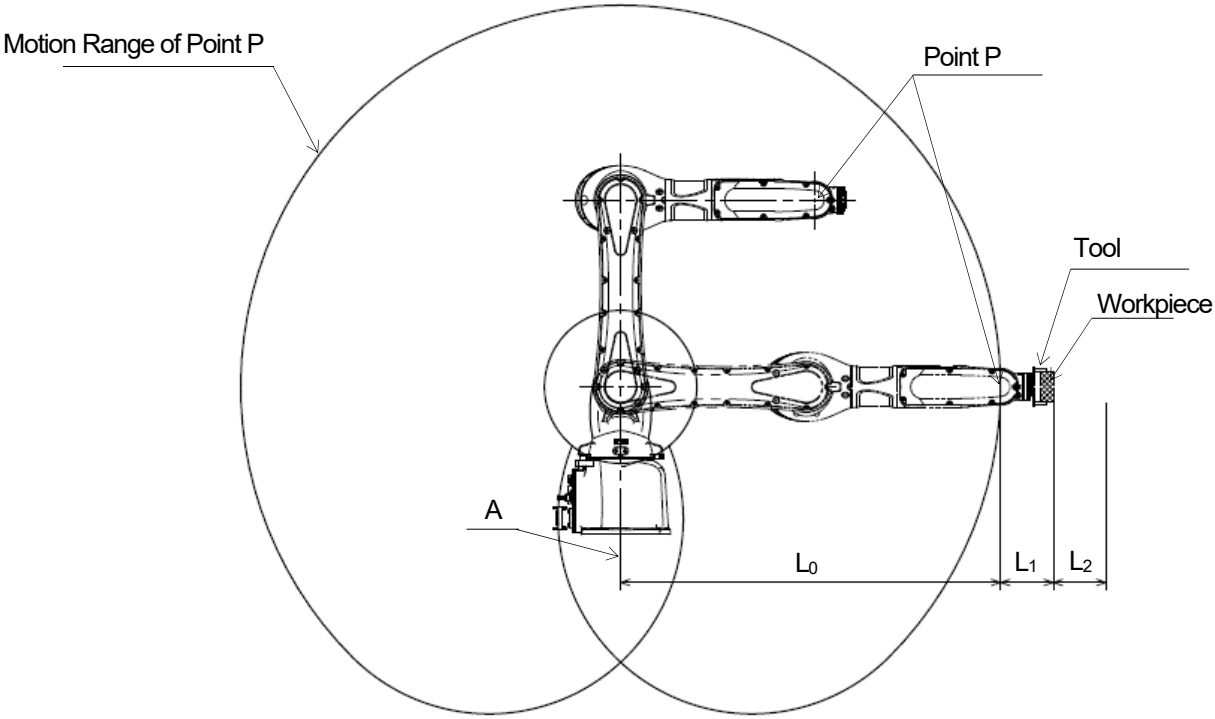

The motion range of the robot is represented by the maximum area that can be covered by point P in the figure above. Therefore, as shown in the figure below, install the safety fence outside circle whose radius is $L_0+L_1+L_2$. Where; L_0 is the length from the center line of arm (point A shown above) to the farthest point of P, L_1 is the length from point P to the farthest point of wrist flange, tool and workpiece, and L_2 is safety margin. For the length of L_0, refer to the drawings in "3.2 Motion Range and Specifications."

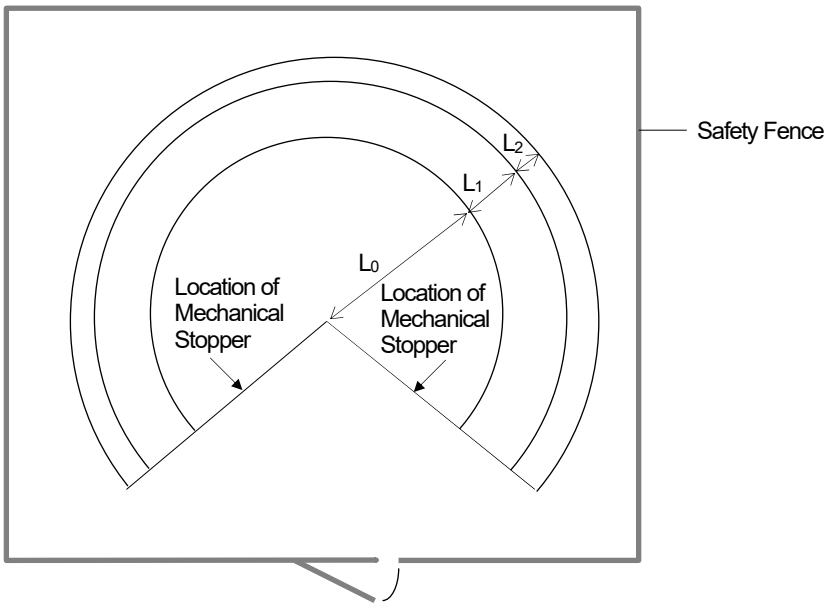

3.2 Motion Range and Specifications

RS007N

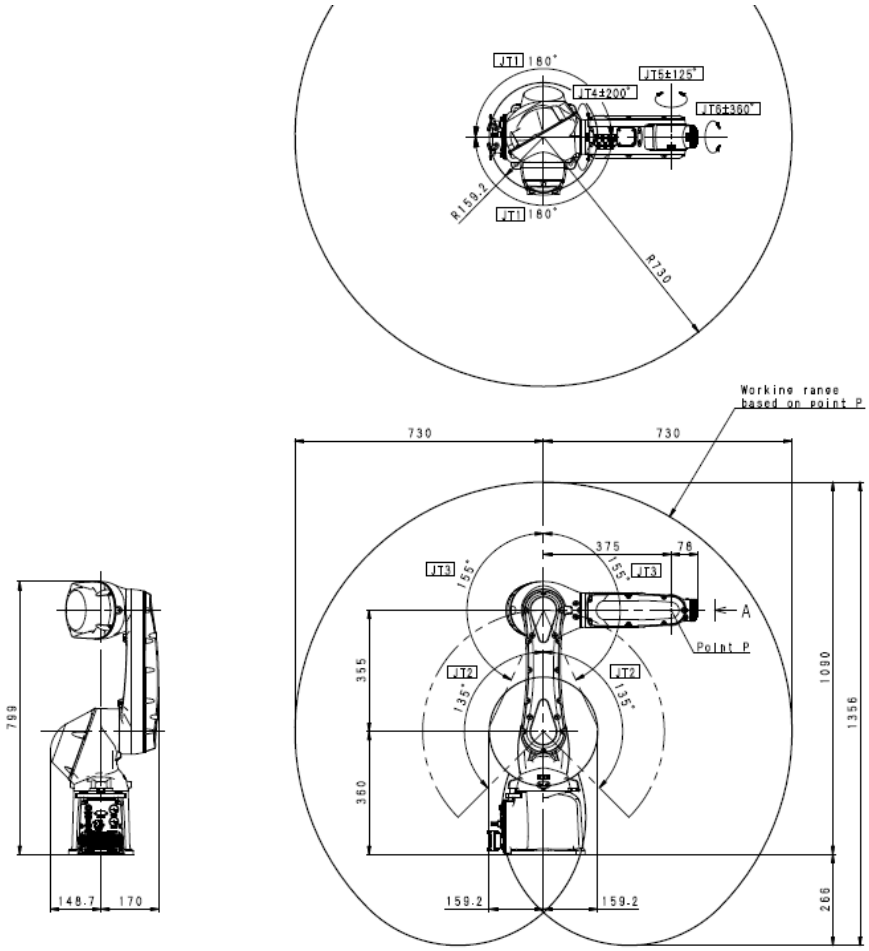

Model	Vertically articulated robot		
Degree of Freedom of Motion	6		
Motion Range and Maximum Speed	JT	Motion Range	Max. Speed
	1	±180°	470°/s
	2	±135°	380°/s
	3	±155°	520°/s
	4	±200°	550°/s
	5	±125°	550°/s
	6	±360°	1,000°/s
Max. Payload	7 kg		
Wrist Load Capacity	JT	Torque	Moment of Inertia
	4	17.0 N·m	0.5 kg·m^2
	5	17.0 N·m	0.5 kg·m^2
	6	10.0 N·m	0.2 kg·m^2
Repeated Positional Accuracy	±0.02 mm		
Mass	35 kg		
Acoustic noise	RS007N-A	RS007N-B	
	<80 dB(A)*1	<70 dB(A)*1	

*1 Measurement conditions
- Robot tightly fixed to a flat floor surface
- Point 2,000 mm from the JT1 axis center

(Noise level varies situationally.)

RS007L

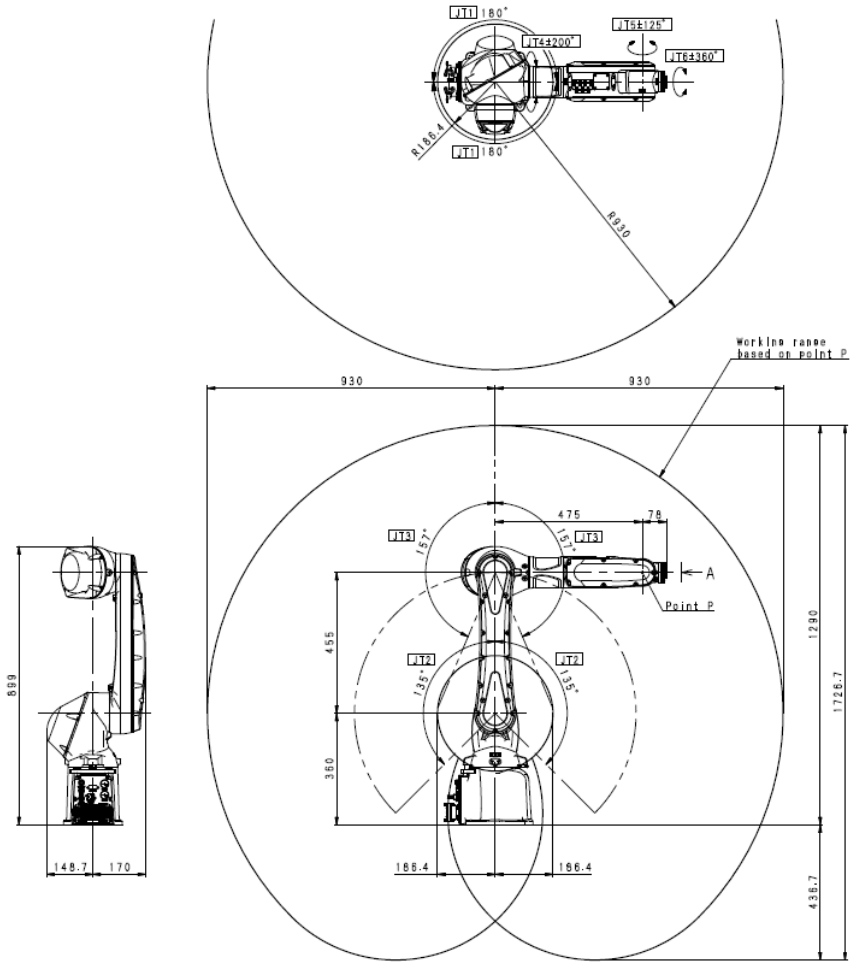

Model	Vertically articulated robot		
Degree of Freedom of Motion	6		
Motion Range and Maximum Speed	JT	Motion Range	Max. Speed
	1	±180°	370°/s
	2	±135°	310°/s
	3	±157°	410°/s
	4	±200°	550°/s
	5	±125°	550°/s
	6	±360°	1,000°/s
Max. Payload	7 kg		
Wrist Load Capacity	JT	Torque	Moment of Inertia
	4	17.0 N·m	0.5 kg·m^2
	5	17.0 N·m	0.5 kg·m^2
	6	10.0 N·m	0.2 kg·m^2
Repeated Positional Accuracy	±0.03 mm		
Mass	36 kg		
Acoustic noise	RS007N-A	RS007N-B	
	<80 dB(A)*1	<70 dB(A)*1	

*1 Measurement conditions
- Robot tightly fixed to a flat floor surface
- Point 2,200 mm from the JT1 axis center

(Noise level varies situationally.)

4 Transportation Methods

4.1 Wire Hoisting (Without Base Plate)

Mount an eyebolt to the arm as shown in the figure below, and hoist up the robot by fastening wires to it. (Follow the same procedures when attaching to a pedestal.)

WARNING

Add anti-rotation wire without fail when hoisting up robot.
If the robot rotates, eyebolt may come loose and the robot may fall.

CAUTION

When hoisting the robot, care is required as it may tip forward or back depending on its posture or how the various options are installed. If the robot is hoisted while at an angle, shocks may result in swinging or damage; wires may catch on the harness or piping; and external parts may cause interference resulting in damage. After transport is completed, remove the eyebolt attached to the robot arm.

Model		RS007N	RS007L
Hoisted posture		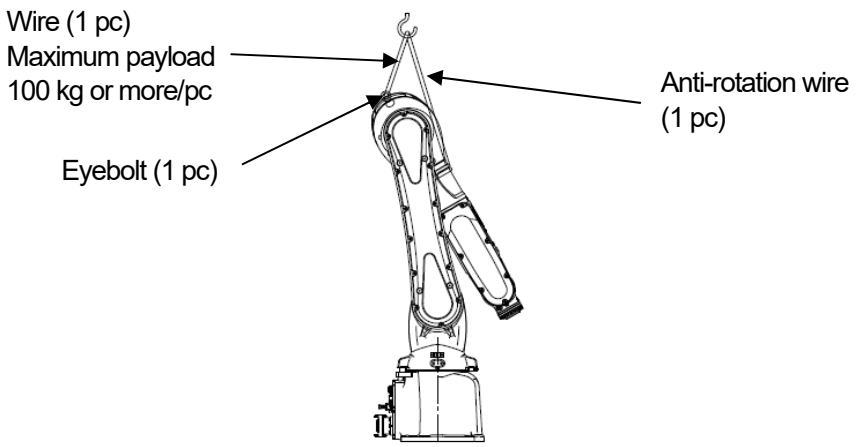	
Hoisting posture	JT1	0°	0°
	JT2	10°	10°
	JT3	-158°	-160
	JT4	0°	0°
	JT5	-22°	-20°
	JT6	0°	0°
Arm mounting eyebolts (Compliant with ISO 3266)		M6×1 pc	M6×1 pc

4.2 Wire Hoisting (With Base Plate)

Mount four eyebolts to the base plate and fasten wires to them as shown in the figure below. To prevent the robot from falling, also mount an eyebolt to the arm and hoist it up by fastening wires to it. (Follow the same procedures when attaching to a pedestal.)

⚠ CAUTION

When hoisting the robot, care is required as it may tip forward or back depending on its posture or how the various options are installed. If the robot is hoisted while at an angle, shocks may result in swinging or damage; wires may catch on the harness or piping; and external parts may cause interference resulting in damage. After transport is completed, remove the eyebolt attached to the robot arm.

Model		RS007N	RS007L
Hoisted posture		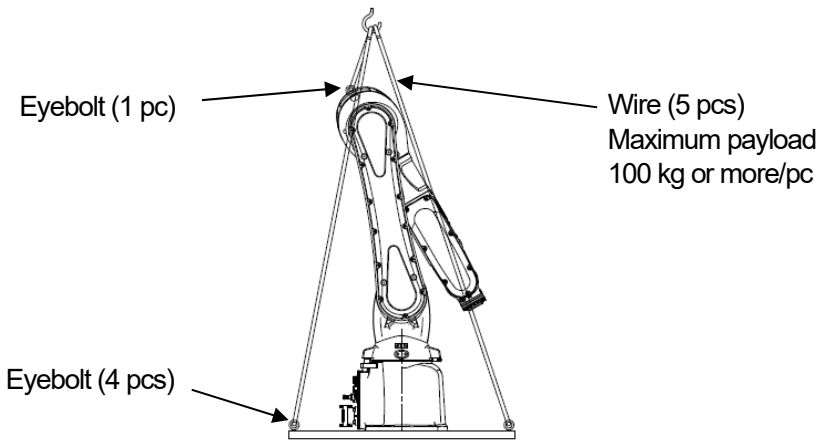	
Hoisting posture	JT1	0°	0°
	JT2	10°	10°
	JT3	-158°	-160
	JT4	0°	0°
	JT5	-22°	-20°
	JT6	0°	0°
Arm mounting eyebolts (Compliant with ISO 3266)		M6×1 pc	M6×1 pc
Base plate part number		60360-2102	

5 Base Installation Dimensions

Use the bolt holes and fix with high tensile strength bolts during base installation.

Model	RS007N, RS007L
Dimensions of the installed part	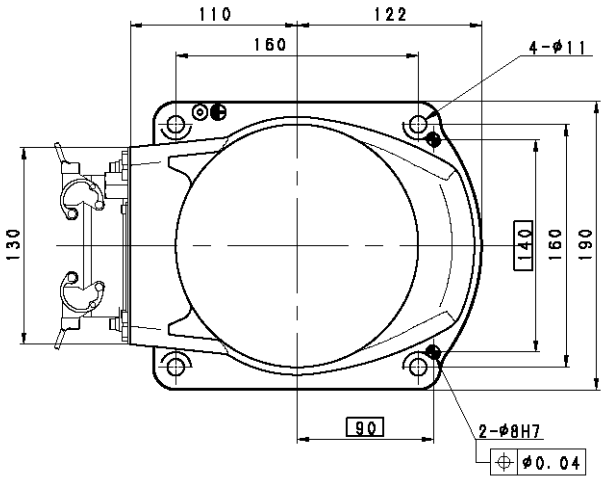
Cross-section figure of the installed part	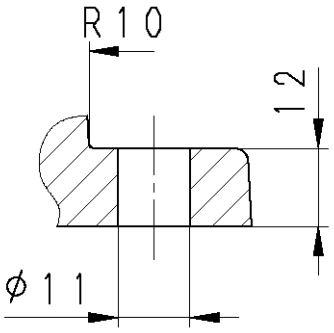
Bolt hole	4-⌀11
High tensile bolt	4-M10 Material: SCM435 Strength class: at least 10.9
Tightening torque	57 N·m
Installation surface angle	Within ±5°

[NOTE]

The robot may be removed during maintenance. Be sure to drill precise pin holes in the locations on the installation surface as shown above so that you can use pins when installing the robot.

6 Installation Method of Robot Pedestal

Use the bolt holes and fix with high tensile strength bolts during installation of robot pedestal.

Model	RS007N, RS007L
Dimensions of the installed part	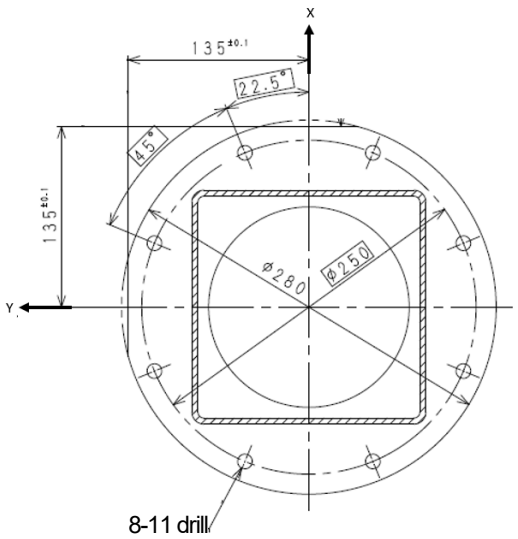
Cross-section figure of the installed part	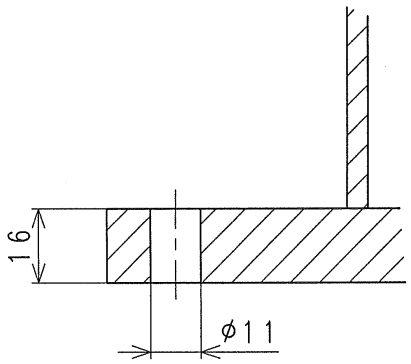
Bolt hole	8-ø11
High tensile bolt	8-M10 Material: SCM435 Strength class: at least 10.9
Tightening torque	57 N·m
Installation surface angle	Within ±5°

7 Installation Method

WARNING

When installing the robot on the wall or ceiling, the robot may fall or be damaged during the installation operation. Be sure to contact nearest Kawasaki when using this installation method.

7.1 Installing the Base Directly on the Floor

As shown in the figure below, fix a steel plate with a thickness of at least L2 (see table below) with anchors.
Secure the steel plate firmly so that it can withstand the reaction force from the robot.
When selecting and installing anchors, refer to the anchor manufacturer's design guidelines and consider the safety factor.

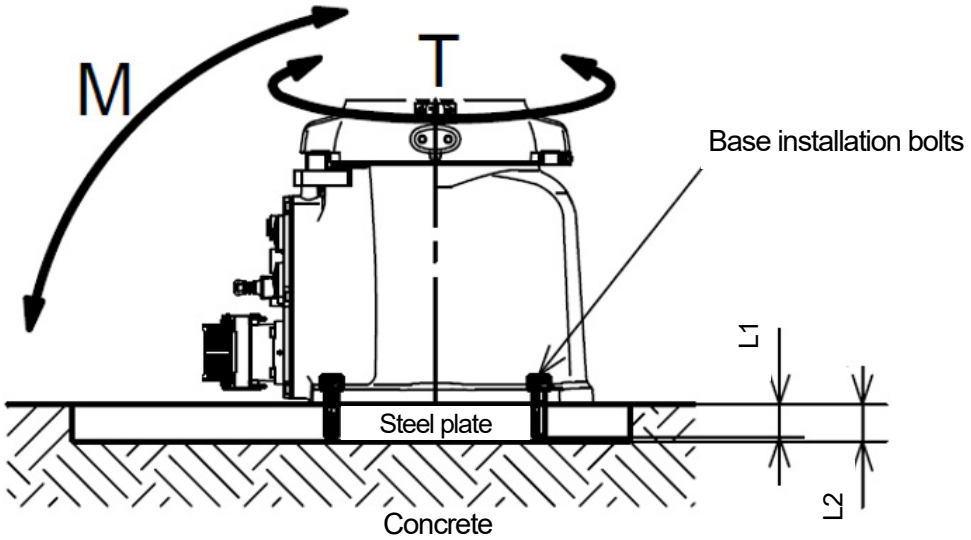

Model	RS007N, RS007L
M (Overturning moment)	1,315 N·m
T (Rotational torque)	991 N·m
Base installation bolt	4-M10
Tightening torque	57 N·m
L1	At least 13 mm
L2	At least 14 mm

7.2 Installing the Robot Pedestal on the Floor

Secure the robot pedestal firmly with anchors, ensuring it has enough strength to withstand the reaction force from the robot.
When selecting and installing anchors, refer to the anchor manufacturer's design guidelines and consider the safety factor.

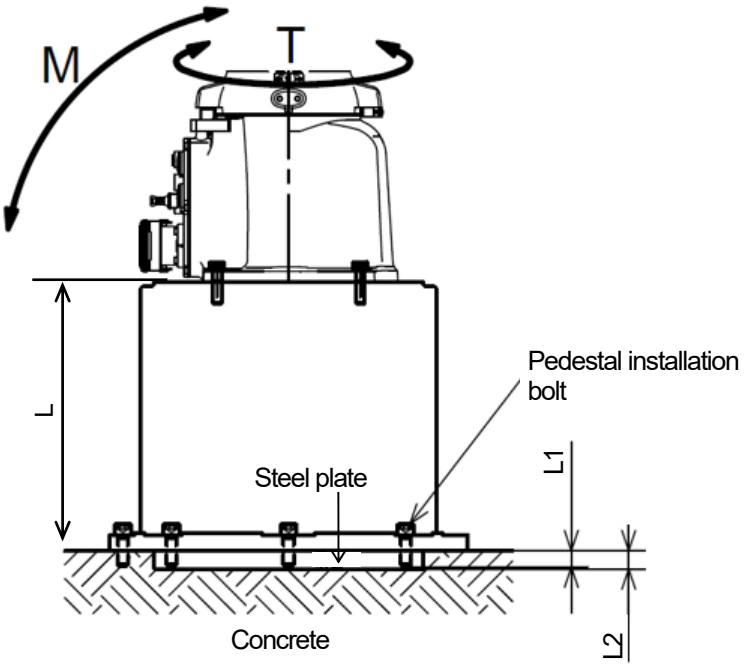

Model	RS007N, RS007L
M (Overturning moment)	1,315 N·m
T (Rotational torque)	991 N·m
Pedestal mass	24 kg (L=600)
	17 kg (L=300)
Pedestal installation bolt	8-M10
Tightening torque	57 N·m
L	600 (60360-2098*1)
	300 (60360-2099*1)
L1	At least 15 mm
L2	At least 17 mm

*1 ( ) indicates the part number of pedestal.

7.3 Installing the Robot Base Plate on the Floor (Without Pedestal)

The base plate is provided with installation holes. Use these holes to secure the base plate to a concrete floor with anchors.
When selecting and installing anchors, refer to the anchor manufacturer's design guidelines and consider the safety factor.

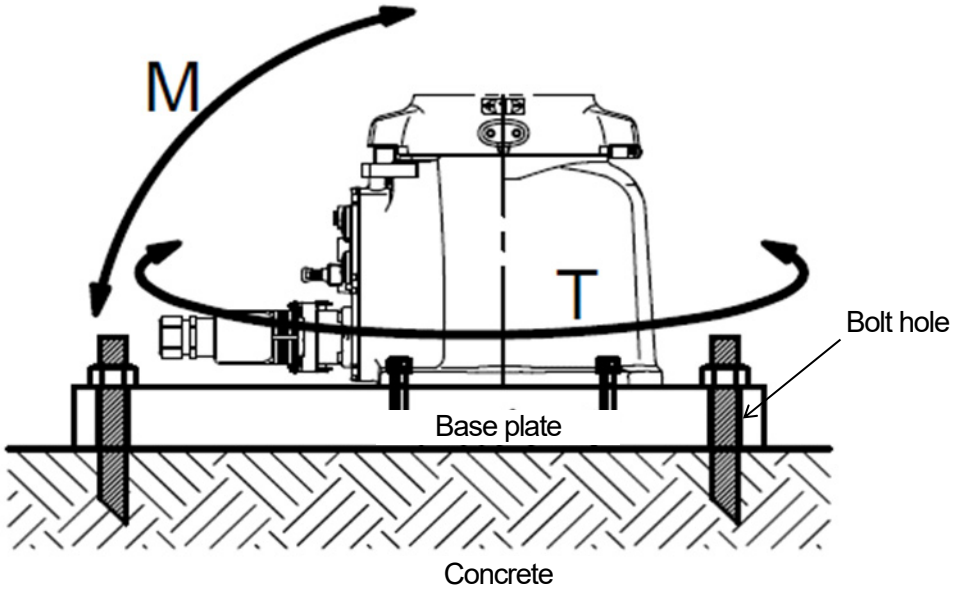

Model	RS007N, RS007L
M (Overturning moment)	1,315 N·m
T (Rotational torque)	991 N·m
Base plate part number	60360-2102
Base plate mass	20 kg
Base plate installation hole	4-⌀14 (300 × 300)
Base plate dimension (mm)	400 × 400 × 16

7.4 Installing the Robot Base Plate on the Floor

The base plate is provided with installation holes. Use these holes to secure the base plate to a concrete floor with anchors.
When selecting and installing anchors, refer to the anchor manufacturer's design guidelines and consider the safety factor.

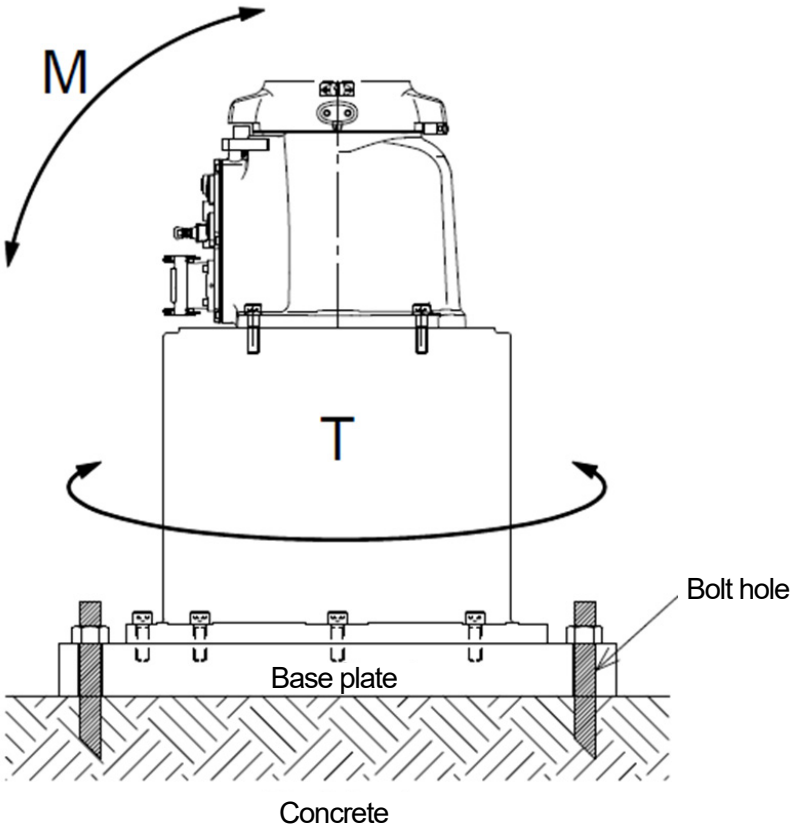

Model	RS007N, RS007L
M (Overturning moment)	1,315 N·m
T (Rotational torque)	991 N·m
Part number of pedestal installation base plate	60360-2102
Base plate mass	20 kg
Base plate installation hole	4-⌀14 (300 × 300)
Base plate dimension (mm)	400 × 400 × 16

8 Installation of Tools

WARNING

When mounting a hand or other tools, be sure to turn OFF the controller power and external power, and after clearly displaying that "inspection and maintenance is in progress," lock out and tag out the external power so that an operator or third party does not accidentally turn ON the power, causing an unexpected situation such as electric shock.

8.1 Wrist Tip (Flange Surface) Dimensions

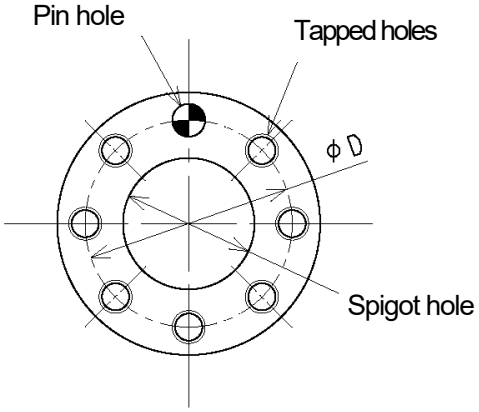

The tip of the robot arm features a flange for mounting tools such as a hand or gun. As shown in the figure on the left, tighten the mounting bolts using the tapped holes machined around the ⌀D circumference of the flange. Additionally, use the pin holes and spigot holes for positioning the hand and gun.

8.2 Mounting Bolt Specifications

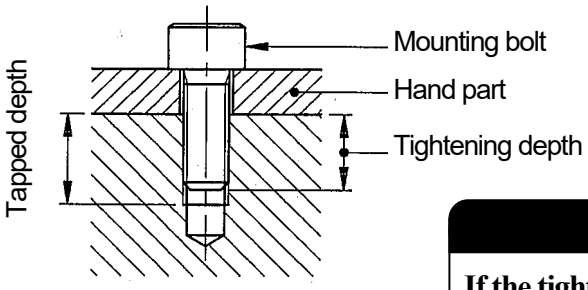

Select bolts with lengths that will reach the designated tightening depth, according to the tapped depths on the tool mounting flange. Additionally, use high tensile bolts, and tighten to the rated torque.

CAUTION

If the tightening depth is above the rated value, then the mounting bolts will bottom out and the tool may not be secured.

Model	RS007N, RS007L
Tapped holes	7-M5
⌀D	⌀31.5
Pin hole	⌀5H7 Depth 6
Spigot hole	⌀20H7 Depth 4
Tapped depth	7 mm
Tightening depth	5 to 6 mm
High tensile bolt	SCM435, at least 10.9
Tightening torque	6.9 N·m

8.3 Load Capacity

Load mass applicable to robot is specified for each model and includes the mass of hand and gun, etc. Applicable load torque and moment of inertia around wrist axes (JT4, JT5, and JT6) are also specified. Strictly observe the following restrictions on them.

⚠ CAUTION

Using the robot beyond its specified load may result in degradation of movement performance and shortening of machine service life. The load mass includes the tool mass such as hand, tool changer, shock absorber, etc. If using the robot in excess of its load capacity, first contact Kawasaki without fail.

The load torque and the moment of inertia can be calculated by the expression below:

Calculation Formula

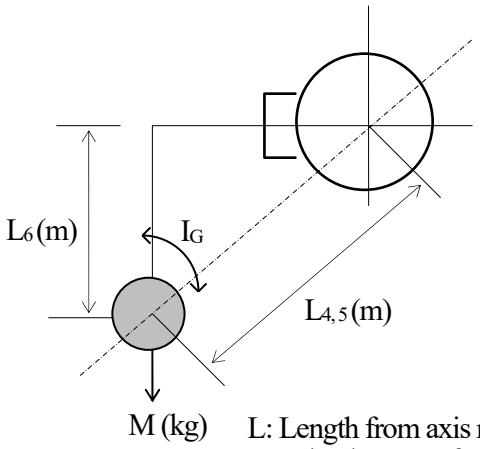

Load mass (Hand included) : $M \leqq Mmax.$ (kg)

Load torque : $T=9.8 \cdot M \cdot L$ (N·m)

Load moment of inertia: $I=M \cdot L^2+I_G$ (kg·m^2)

Mmax: Maximum load mass: See Section 3.2.

L: Length from axis rotation center to load center of gravity. (Unit: m) (See figure)

$L_{4,5}$: Length from JT4(5) axis rotation center to load center of gravity.

L_6: Length from JT6 axis rotation center to load center of gravity.

I_G: Moment of inertia around center of gravity. (Unit: kg·m^2)

If calculation of load is made by dividing the load into construction parts, such as hand and workpieces, use the total calculation values of each part as load torque and moment of inertia.

Regarding the load on the robot wrist section, meet the following restriction conditions:

1. The load mass including hand mass should be less than the following value.
   RS007 = 7 kg
2. The load torque and the moment of inertia around each wrist axis (JT4, JT5, and JT6) should be within the restriction*1, as shown in the graph below.

***1** Load moment of inertia exceeding the restriction may be acceptable. In this case, ensure to specify the load. (However, the robot movement may become slow because of optimizing acceleration and deceleration.) See "AS Language Reference Manual" for setting the load. Operating the robot with wrong settings may result in degradation of movement performance and shortening of machine service life.

RS007N, RS007L

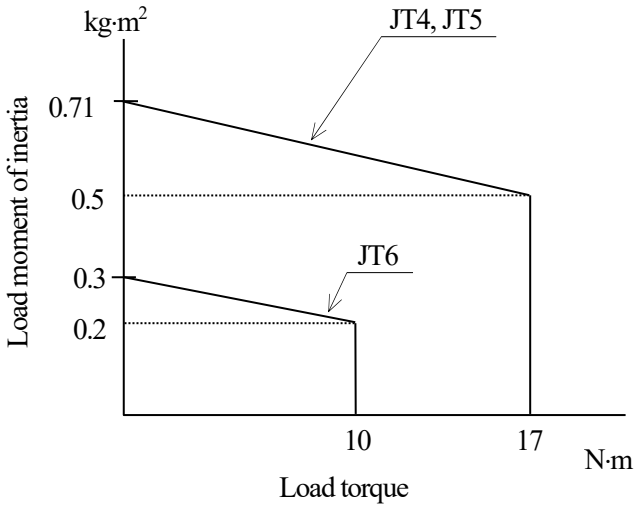

9 Mounting External Equipment

9.1 Service Tapped Hole Positions

Service tapped holes shown in the figure below are available to mount wiring brackets and external equipment on each part of robot arm.

CAUTION

Check the robot movement very carefully and confirm that mounted brackets and external equipment do not interfere with peripheral equipment and robot arm itself.

RS007N-A/B

<Wrist part service tapped holes of RS007N-A>

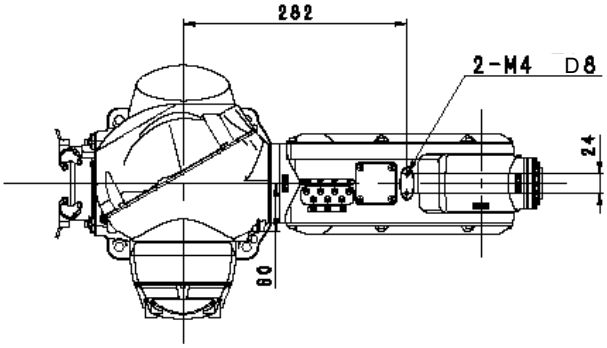

<Common for A/B>

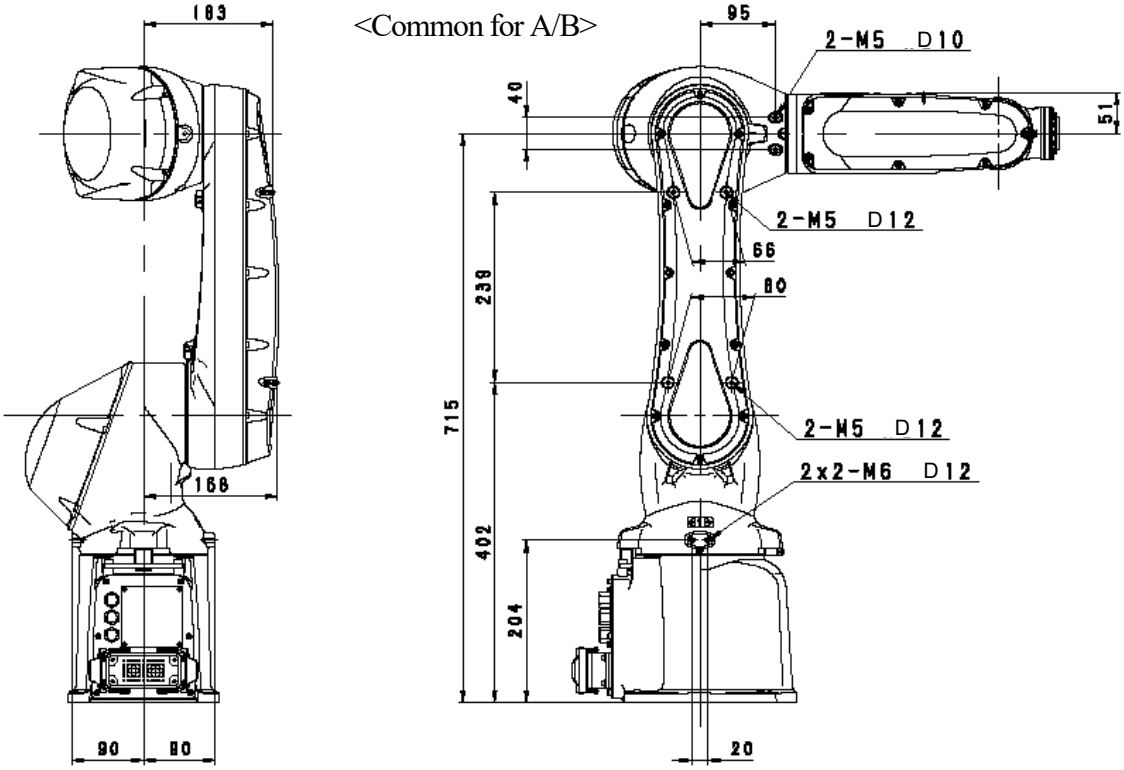

<Wrist part service tapped holes of RS007N-B>

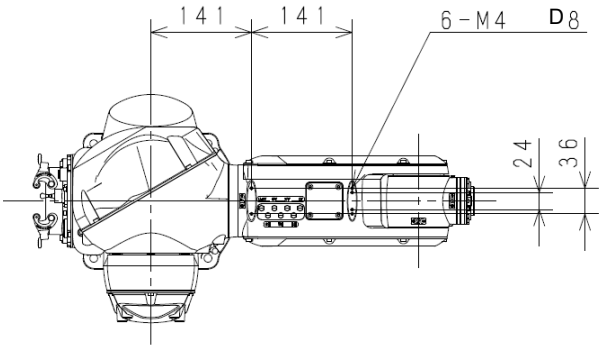

RS007L-A/B

<Wrist part service tapped holes of RS007L-A>

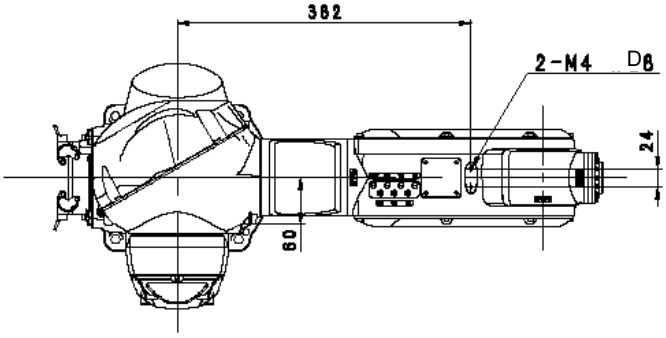

<Common for A/B>

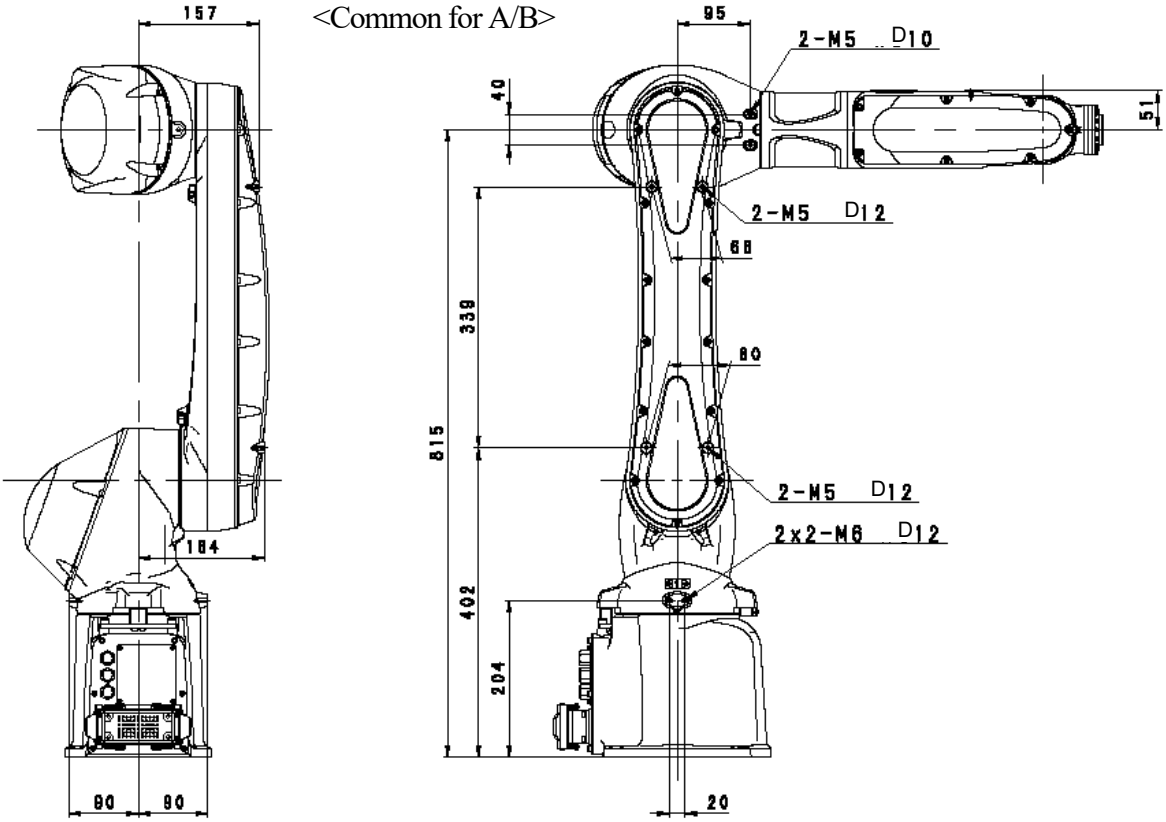

<Wrist part service tapped holes of RS007L-B>

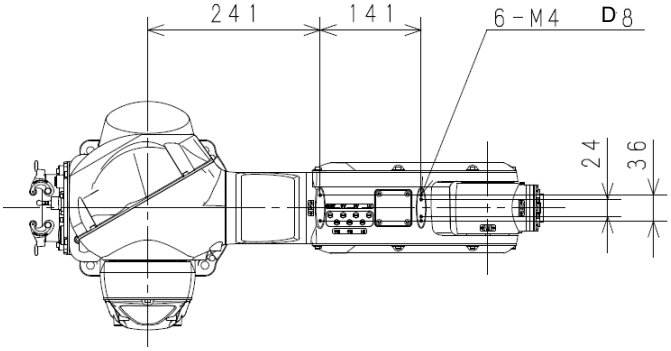

9.2 Calculation of Load Caused by External Equipment

The load capacity is set for each arm model. Strictly observe the following restrictions of the load torque and load moment of inertia on arm.

⚠ CAUTION

If a load at or above the rated value is applied, this can result in deteriorated operational functionality or service life. If an amount other than the rated load will be applied, consult with Kawasaki.

For JT2 and JT3, limit the total load torque on wrist end and arm not to exceed the maximum allowable load torque. The load torque and the moment of inertia can be calculated by the expression on next page.

Calculation Formula

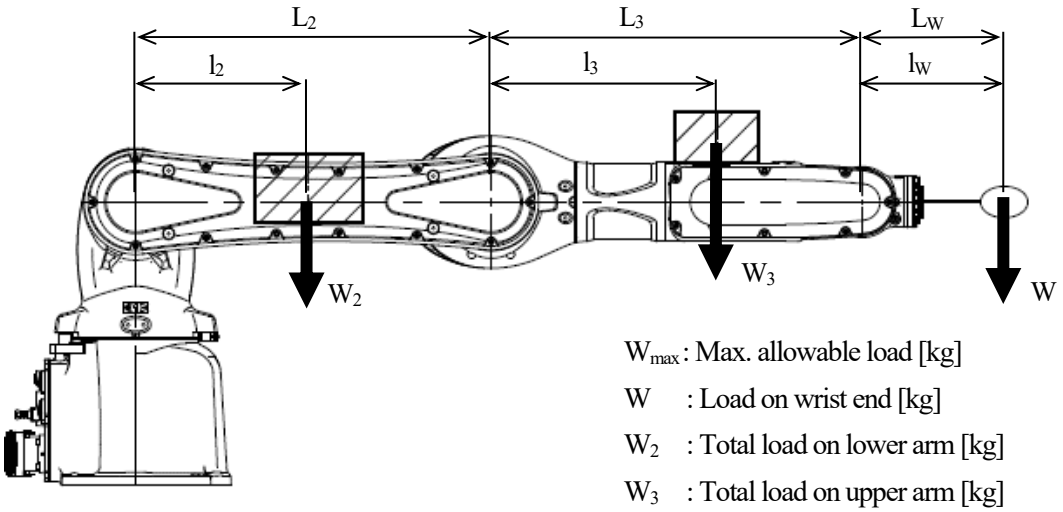

W_{max} : Max. allowable load [kg]

W : Load on wrist end [kg]

W_2 : Total load on lower arm [kg]

W_3 : Total load on upper arm [kg]

l_w : Position of the center of the gravity for load on wrist section [mm]

l_2 : Position of the center of the gravity for total load on lower arm [mm]

l_3 : Position of the center of the gravity for total load on upper arm [mm]

- JT3: $W(L_3+l_w)+W_3 \cdot l_3 \leqq W_{max}(L_3+L_W)$
- JT2: $W(L_2+L_3+l_w)+W_3(L_2+l_3)+W_2 \cdot l_2 \leqq W_{max}(L_2+L_3+L_W)$

Use data in the table below for calculation.

	L_1 [mm]	L_2 [mm]	L_3 [mm]	L_W [mm]	W_{max} [kg]
RS007N	0	355	375	199	7
RS007L	0	455	475	199	7

However, do not exceed values below for W_2 and W_3.

$$W_3 < \frac{W_{max}(L_1 + L_2 + L_3 + L_W)}{L_1 + L_2} \qquad W_2 < \frac{W_{max}(L_1 + L_2 + L_3 + L_W)}{L_1}$$

10 Connection of Air System

10.1 Air Piping

RS007 robot houses air piping and valves for driving the tool on the robot arm. The valves can be turned ON/OFF by the Teach Pendant without using an interlock panel.

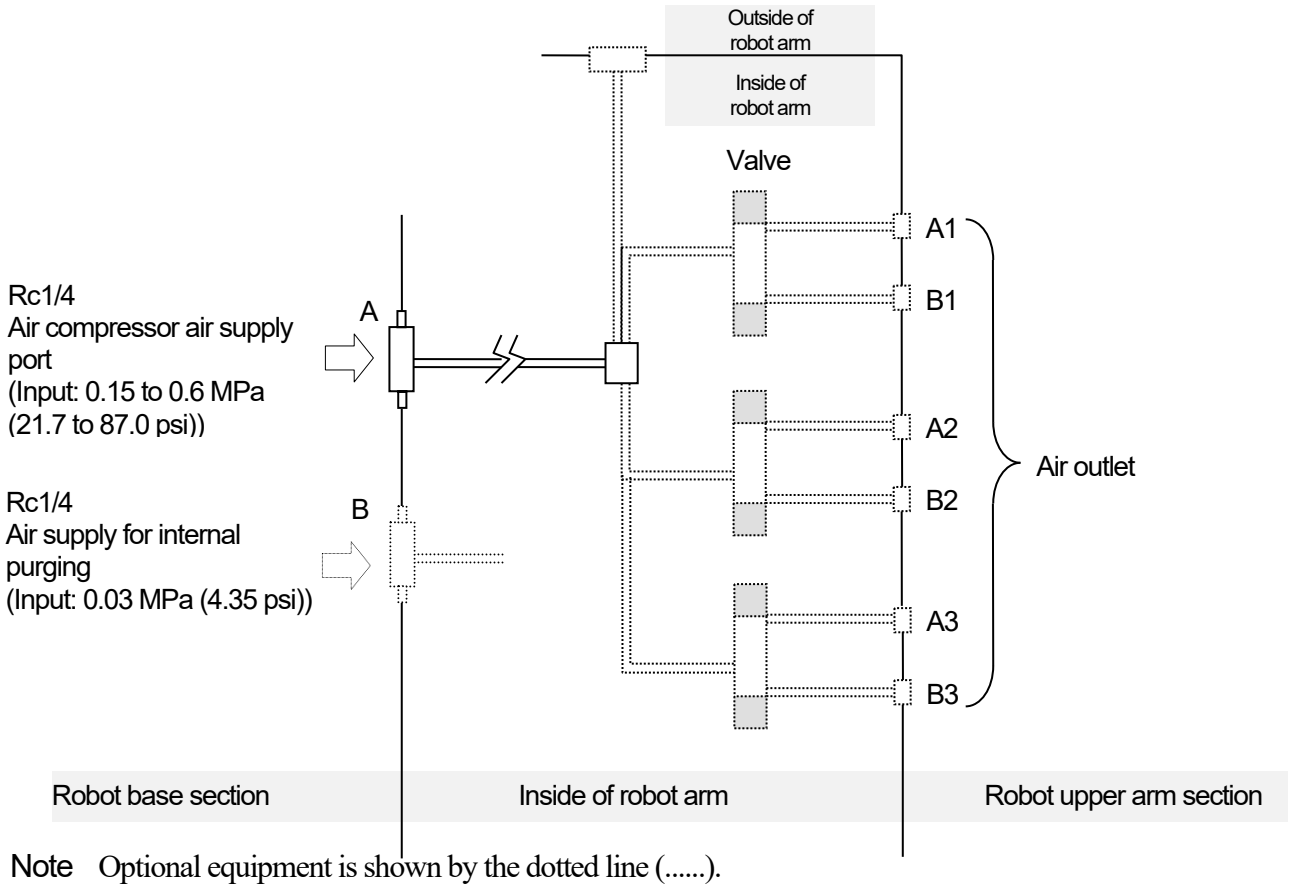

Note Optional equipment is shown by the dotted line (.....).

The built-in valves are specified as follows:

Standard	No built-in valves	
Option	Double solenoid/Single solenoid valves	3 units max.

Note Valve specification: CV value is 0.2 and the number of switching positions is 2.

[NOTE]

Valves that do not meet the above specifications cannot be mounted in the arm. Please contact Kawasaki for information on air system specifications if such valves are used.

10.2 Air Supply to the Robot Arm

RS007N-A, RS007L-A

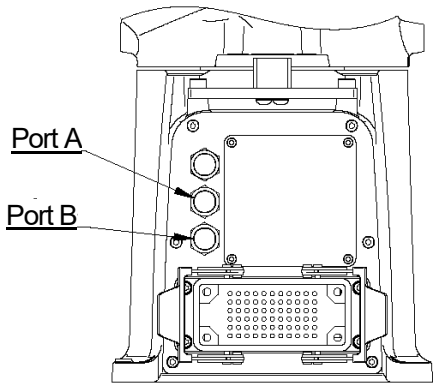

RS007N-B, RS007L-B

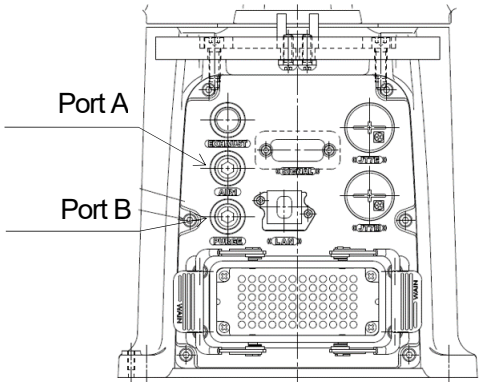

As shown above, the air connection ports are provided in the base section of robot arm.

CAUTION

Supply clean dry air with input pressure of 0.15 to 0.6 MPa (21.7 to 87.0 psi) to Port A (Rc1/4).

For the air purge specification, Port B is provided with air inlet (Rc1/4) in the same way as Port A.

CAUTION

For air purge specification, supply clean dry air with input pressure of 0.03 MPa (4.35 psi).

Tighten the couplers connected to the ports with 6.9 N·m or below.

CAUTION

When connecting the couplers, the frame may be damaged if the couplers are tightened with a large torque.

CAUTION

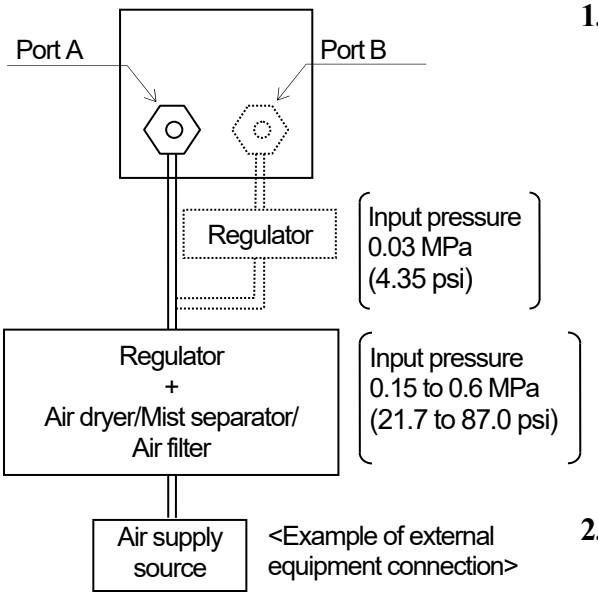

<Example of external equipment connection>

1. **Connect external equipment such as an air dryer, a mist separator and an air filter when the supplied air includes water, oil, dust, etc., because the air supply may lead to malfunction or damage on the built-in valves or the devices inside the arm. In addition, conduct maintenance of the connected equipment (draining, filter cleaning, etc.) periodically.**

2. **Since built-in valves are non-oiling type, do not use any lubricator (oiler).**

10.3 Tubing from Air Outlet to Hand

As shown in the figure below, air outlet ports are provided (optional). The outlet ports are M5.

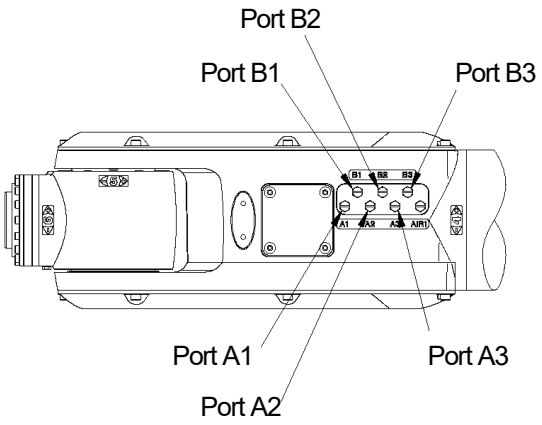

CAUTION

When tubing, ensure that the air outlet ports are not turned.
If the outlet ports turn, the internal tube may bend or break causing air supply stop at worst.

Kawasaki Robot RS007

Installation and Connection Manual

2020-08 : 1st Edition

2026-06 : 2nd Edition

Publication : Kawasaki Heavy Industries, Ltd.

90202-1250DEB

Copyright © 2020 Kawasaki Heavy Industries, Ltd. All rights reserved.