Simple and friendly

Kawasaki

Kawasaki Robot
MXP Series

Installation and Connection Manual

Robot

Kawasaki Heavy Industries, Ltd.

90202-1276DEF

Preface

This manual explains the installation and connection procedures for the Kawasaki Robot MXP Series.

Be sure to fully understand the content of this manual and pay attention to the safety items in this manual and the separate "Safety Manual" when performing an operation. Note that this manual only provides descriptions of the installation and connection procedures for the arm. Also see the "Installation and Connection Manual" for the controller.

Again, do not perform any kind of work until you fully understand all of the contents of this manual. Also, Kawasaki is not responsible for damages or problems that occur as a result of performing work after referring to specific pages only.

[NOTE]

The explanations in this manual are applicable to the following robots.
MXP360L, MXP410X, MXP710L

1. This manual does not guarantee the operation of the system with which the robot is used. Accordingly, Kawasaki is not responsible for any accidents, damages, and/or problems relating to industrial property rights as a result of using the system.
2. It is recommended that all personnel assigned for activation of operation, teaching, maintenance or inspection of the robot attend the necessary education/training course(s) prepared by Kawasaki, before assuming their responsibilities.
3. Kawasaki reserves the right to change, revise, or update this manual without prior notice.
4. This manual may not, in whole or in part, be reprinted or copied without the prior written consent of Kawasaki.
5. Store this manual with care and keep it available for use at any time. If the robot is reinstalled or moved to a different site or sold off to a different user, attach this manual to the robot without fail. In the event that the manual is lost or damaged, contact Kawasaki.

Copyright © 2022 Kawasaki Heavy Industries, Ltd. All rights reserved.

Symbols

The items that require special attention in this manual are designated with the following symbols.

Ensure proper and safe operation of the robot and prevent physical injury or property damage by complying with the safety matters given in the boxes with these symbols.

⚠ DANGER

Failure to comply with indicated matters can result in imminent injury or death.

⚠ WARNING

Failure to comply with indicated matters may possibly lead to injury or death.

⚠ CAUTION

Failure to comply with indicated matters may lead to physical injury and/or mechanical damage.

[NOTE]

Denotes precautions regarding robot specification, operation, and maintenance.

⚠ WARNING

1. **The accuracy and effectiveness of the diagrams, procedures, and detailed explanations given in this manual cannot be confirmed with absolute certainty. Therefore, should any unexplained questions or problems with work arise, please contact your nearest Kawasaki.**
2. **Safety related contents described in this manual apply to the specific matters described and not to all robot work. They are not applicable to other general items or other matters. In order to perform all work safely, read and fully understand the "Safety Manual," all pertinent laws, regulations, and related materials, as well as all the safety explanations in each chapter, and prepare safety measures suitable for actual work.**

Table of Contents

Preface i
Symbols ii
1 Precautions 1
1.1 Precautions During Transportation, Installation, and Storage 1
1.2 Robot Arm Installation Environment 2
1.3 Residual Risk When Operating 3
2 Arm Installation and Connection Work Flow 7
3 Motion Range and Specifications 8
3.1 Determination of Safety Fence Installation Location from Motion Range 8
3.2 Motion Range and Specifications 9
3.3 Mechanical Stoppers 15
3.3.1 JT1 Stopper Block 17
4 Transportation Methods 20
4.1 Using a Transporting Stand 20
4.2 Wire Sling Suspension 25
4.3 Forklift 28
5 Base Installation Dimensions 30
6 Reactive Forces on Installation Area During Operation 31
7 Installation 32
7.1 Installing the Base Directly on the Floor 32
8 Mounting of Tools 33
8.1 Wrist Tip (Flange Surface) Dimensions 33
8.2 Mounting Bolt Specifications 34
8.3 Load Capacity 35
9 Mounting of External Devices 38
9.1 Service Tapped Hole Positions 38
9.2 Calculation of External Device Load Capacity 41
Appendix 1 Stopping Performance of Robot 44

1 Precautions

1.1 Precautions During Transportation, Installation, and Storage

When transporting the Kawasaki Robot to the installation location, observe the following precautions for transportation, installation, and storage.

⚠ WARNING

1. **When transporting the robot by crane or forklift, never allow a person to support it.**
2. **During transportation, never allow a person to ride on the robot, and never allow a person to get under it when it is suspended.**
3. **Before starting installation, be sure to turn OFF the controller power and external power switches, and after clearly displaying that "inspection and maintenance is in progress," lock out and tag out the external power switch so that an operator or third party does not accidentally turn ON the power, causing an unexpected situation such as electric shock.**
4. **When operating the robot, be sure to confirm safety points and absence of problems regarding robot installation before turning the motor power ON, and moving the robot arm to the designated position. Take care not to approach the arm and become accidentally caught when doing so. After setting the arm to the desired position, turn OFF the controller power and external power again as mentioned above, clearly indicate that "inspection and maintenance is in progress," and lock out and tag out the external power switch before starting work.**

⚠ CAUTION

1. **The robot is made of precision parts. Be careful not to subject it to impact or shock during transport.**
2. **When transporting the robot, clear away obstructions, etc. in advance so that it can be transported safely to the installation location.**
3. **Please pay attention to the following points when transporting or storing the robot.**
   (1) **Maintain an ambient temperature within the -10°C to 60°C range.**
   (2) **Maintain a relative humidity within the 35% to 85% RH range (without any condensation).**
   (3) **Avoid large vibrations or shocks.**
4. **Oil may drip from the gas spring during the initial operation of the robot arm, but this does not impair the performance of the gas spring. Wipe off any oil and use the robot arm.**

1.2 Robot Arm Installation Environment

Install the robot arm in a location that satisfies the following conditions.

1. For floor-standing installation, the location must be capable of maintaining a horizontal surface within ±5°.
2. The floor and frame must have adequate hardness.
3. The location must be able to maintain flatness so that excess force is not exerted on the installed part.
   (If flatness cannot be ensured, adjust with a liner. Flatness of setting surface: under 0.3)
4. The ambient operating temperature must be between 0°C and 45°C.
   (Starting in low temperatures increases the viscosity of grease and oil, which can lead to deviation errors and excess loads. In such cases, move the robot at low speeds before operating.)
5. Relative humidity must be 35% to 85% RH. In addition, there must not be any condensation.
6. The location must have little dirt, dust, oil, smoke, or water, etc.
7. The location must have no flammable or corrosive fluids or gases.
8. The location must not be subject to large vibrations. (0.5 G or less)
9. The location must be well protected against electrical noise.
10. The location must safeguard a space that is larger than the robot arm's motion range.
    (1) Install a safety fence around the robot, and make sure that it does not interfere with surrounding equipment, even when the arm has tools or workpieces mounted and is extended to its maximum motion range.
    (2) Minimize the number of entrance gates in the safety fence (only one is best) and equip the entrance gate with a safety plug. Enter and exit the fence from here.
    (3) For details concerning safety fences, observe the ISO 10218 requirements.

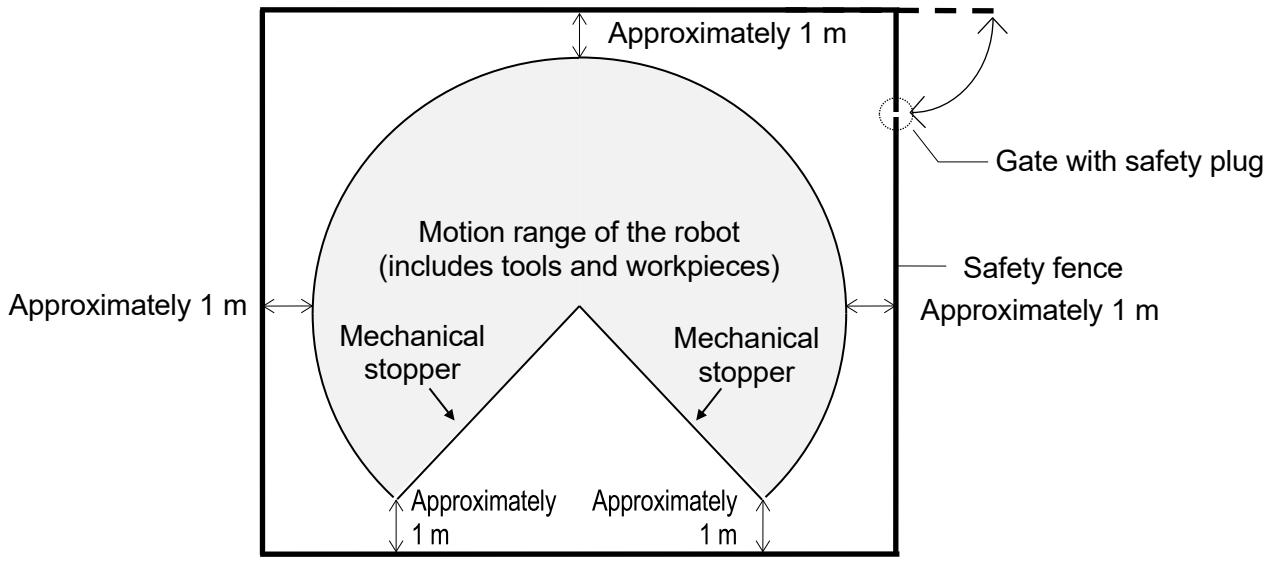

1.3 Residual Risk When Operating

WARNING

Pay attention to the residual risk areas described in the figures below during operation.

- **High-temperature parts may remain at 60°C or higher even after operation has stopped, so direct contact may cause burns. Wear heat-resistant gloves when working on these parts.**
- **Electric shock danger areas are subject to voltages of 200 V or more when the power is ON. To prevent electric shock, check the power status beforehand.**

■ High-temperature and electric shock danger areas (MXP360L)

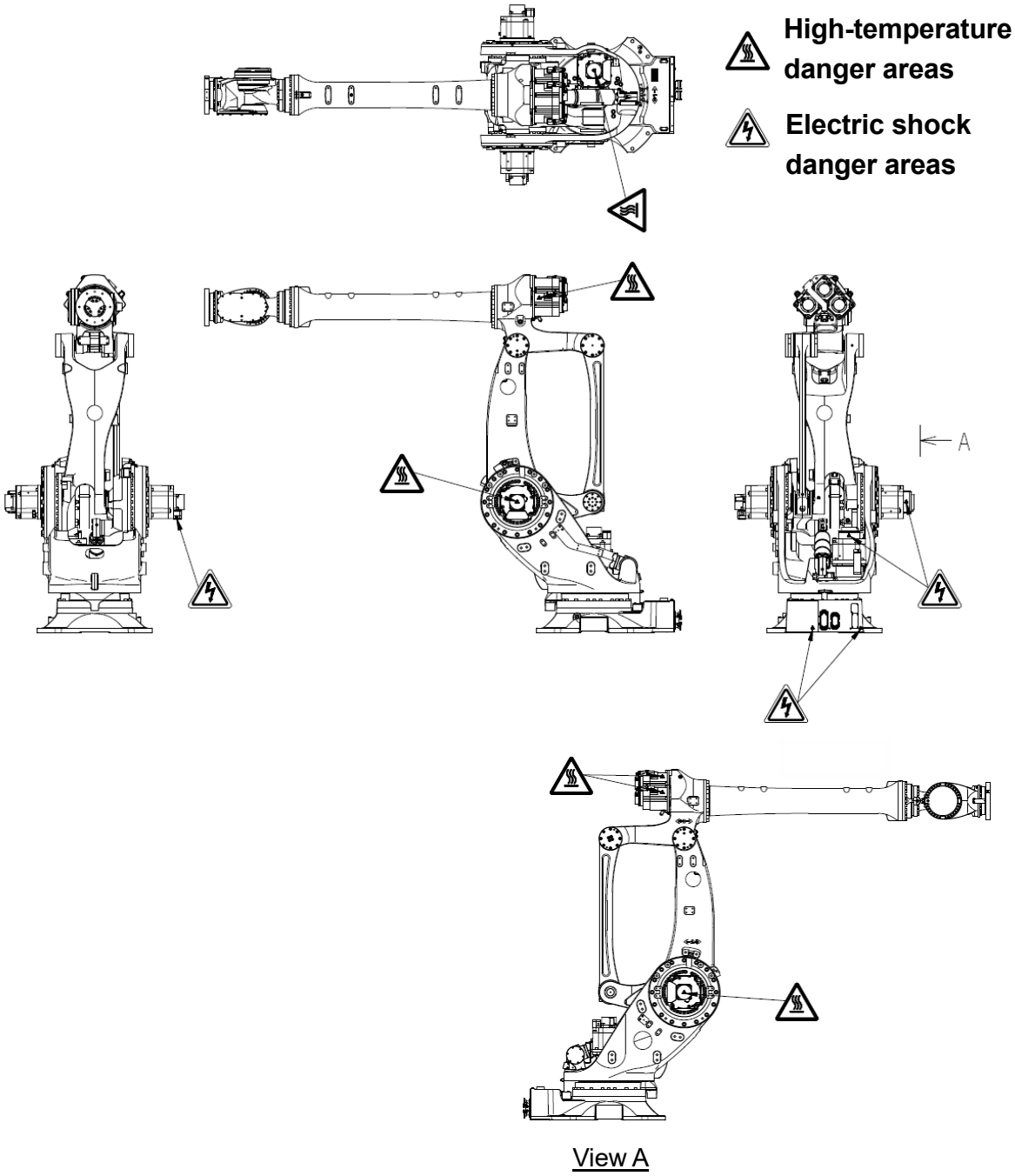

■ **High-temperature and electric shock danger areas (MXP410X, MXP710L)**

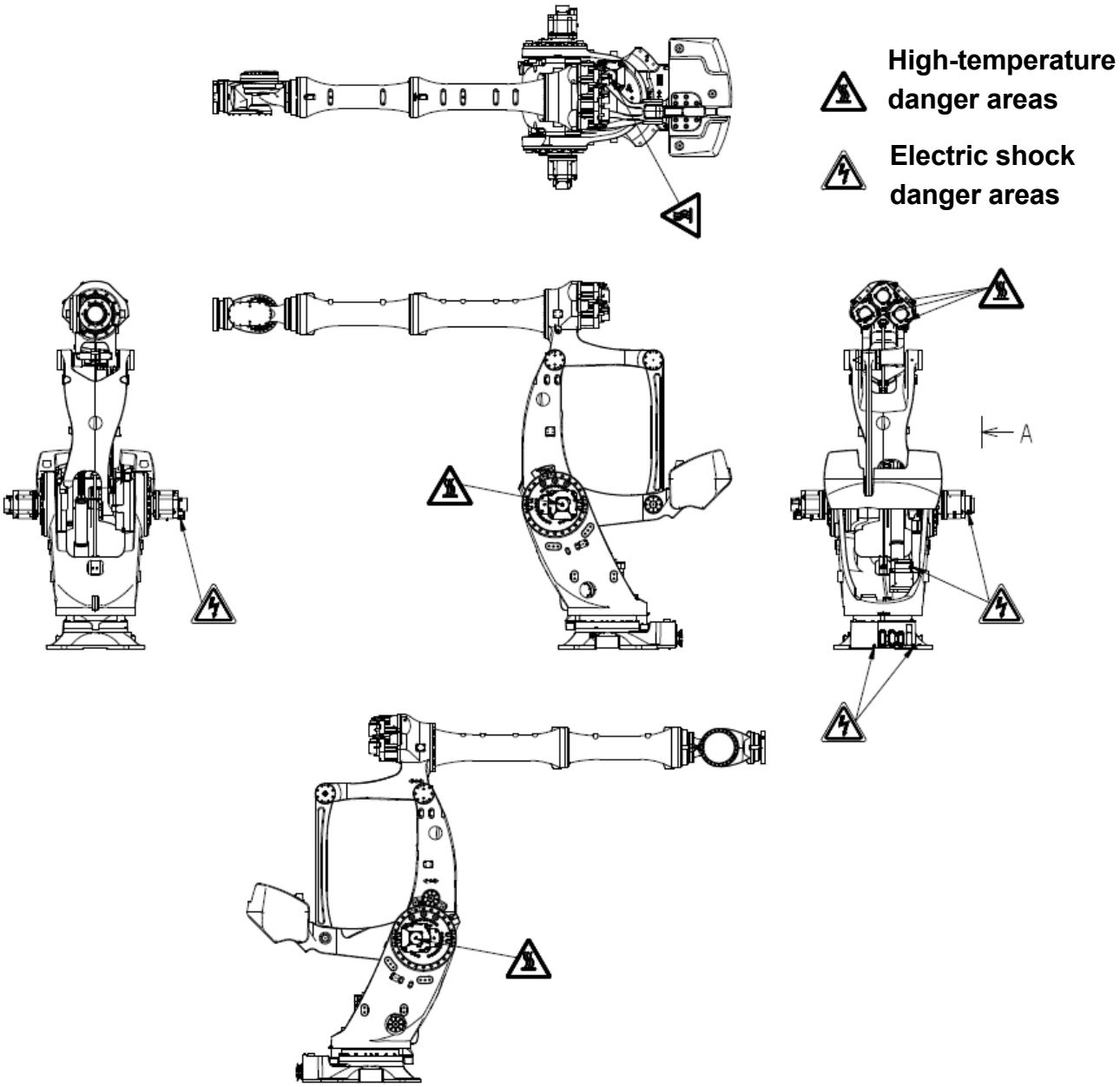

View A

■Catching danger areas (MXP360L)

◯ **Catching danger areas**

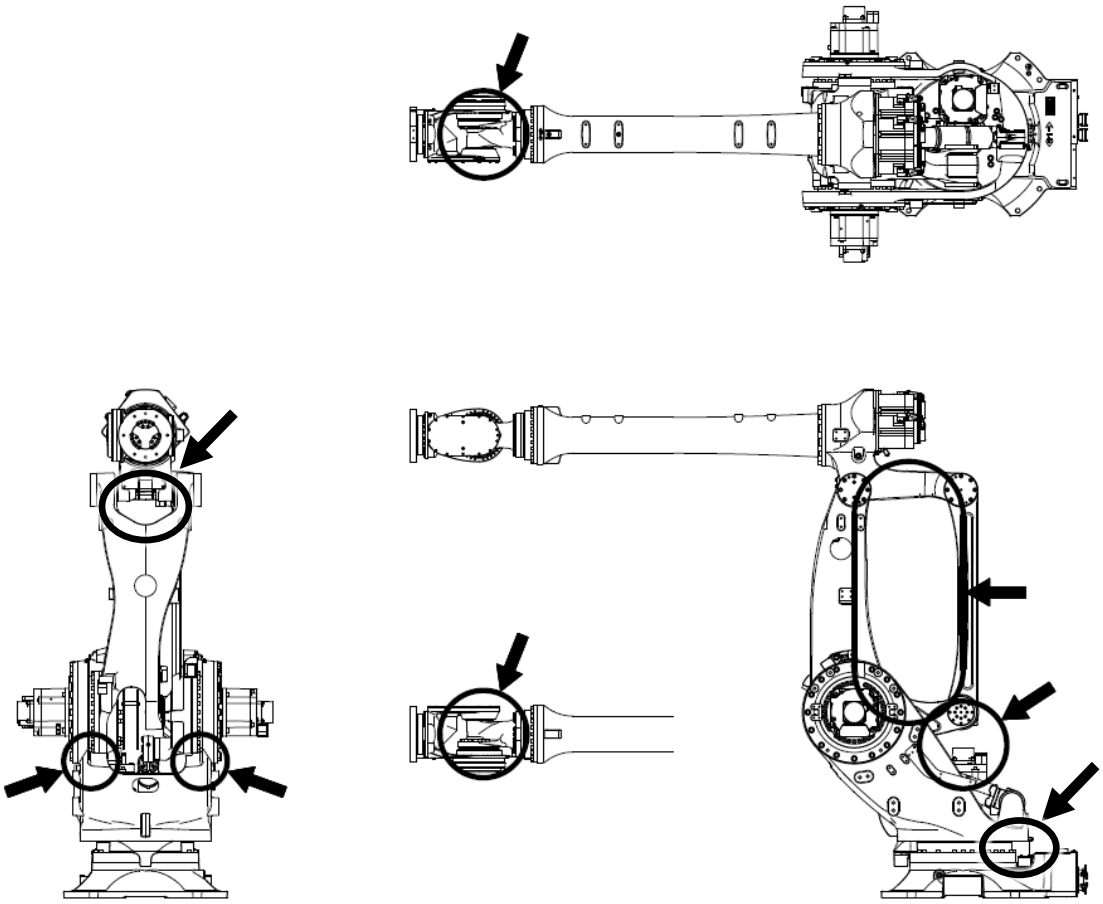

■Catching danger areas (MXP410X, MXP710L)

◯ Catching danger areas

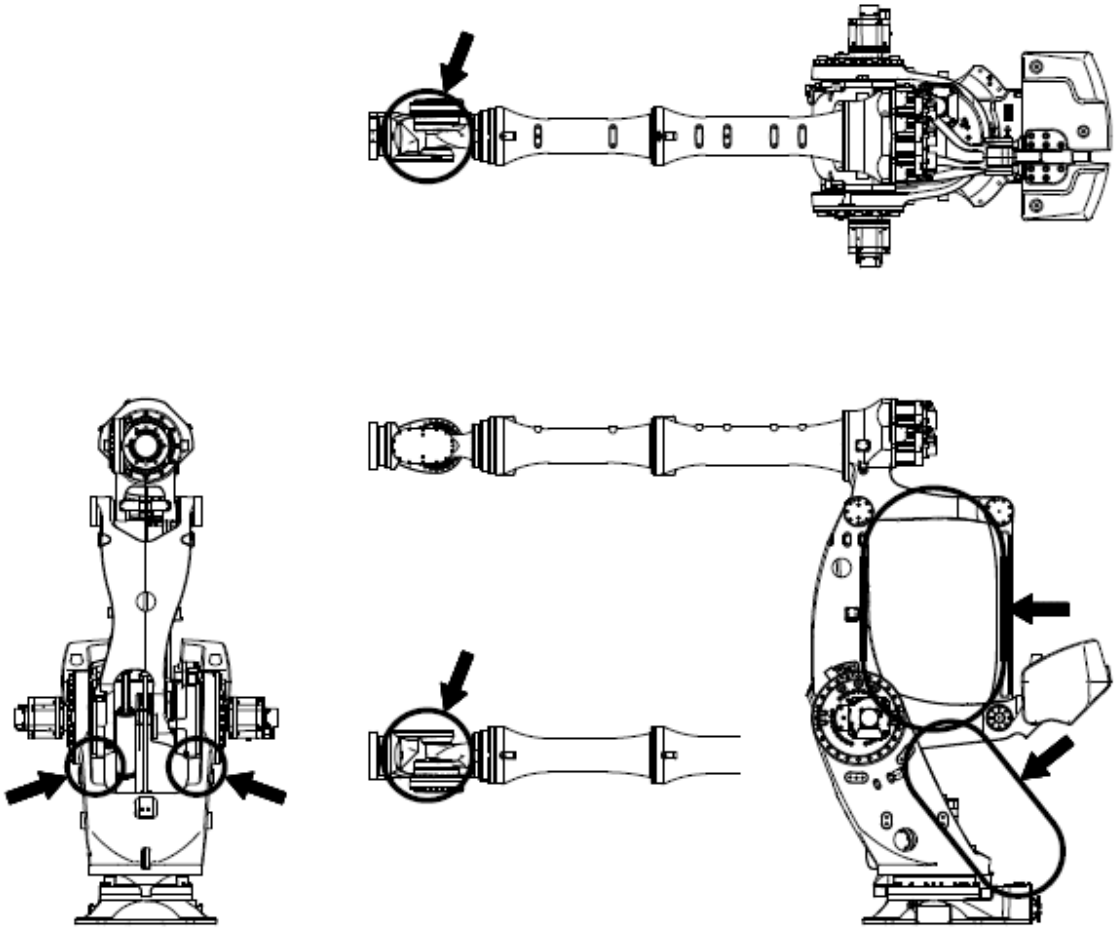

2 Arm Installation and Connection Work Flow

The work flow described here is for the robot arm only. See the controller's "Installation and Connection Manual" for more information regarding the controller.

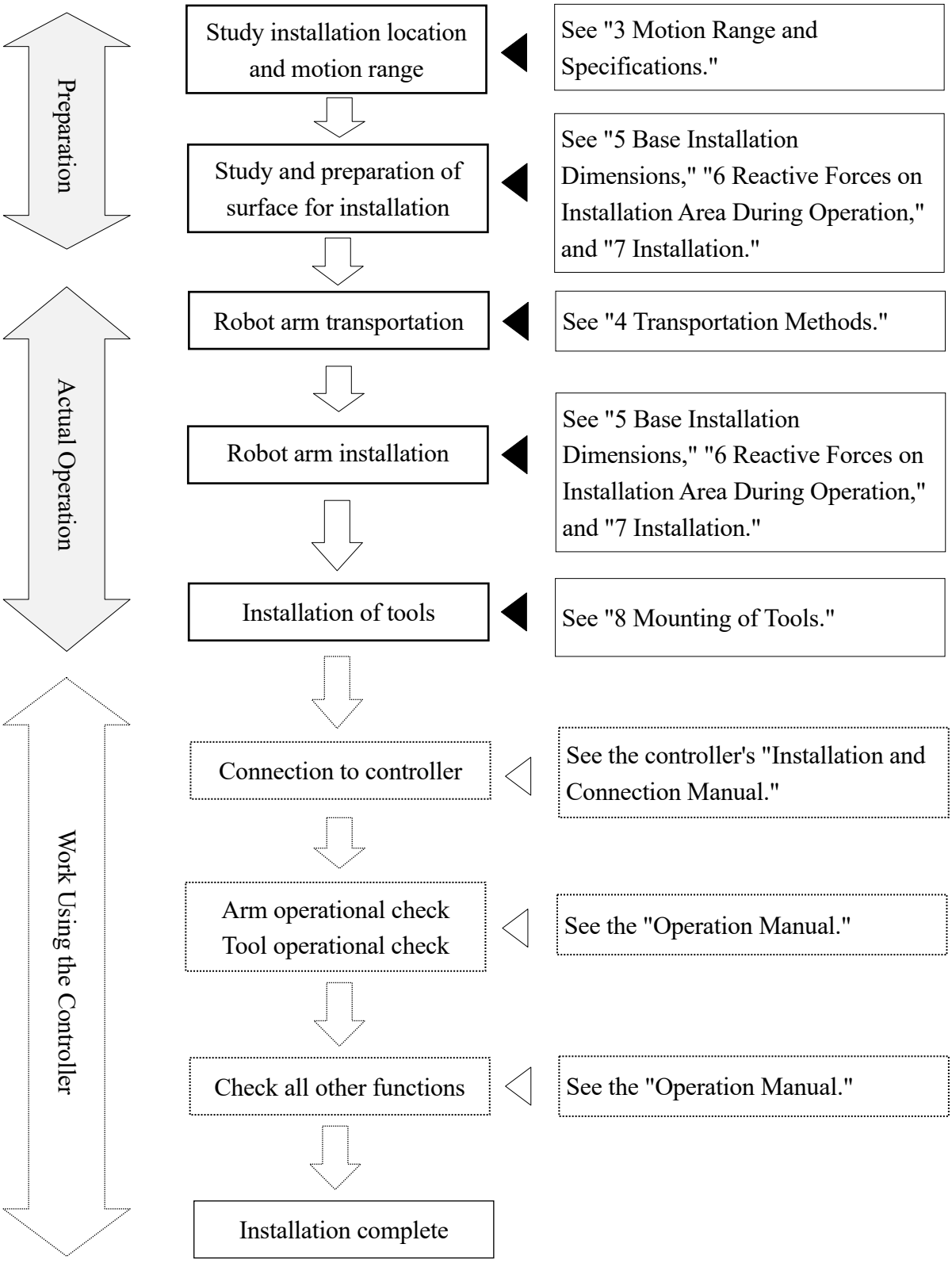

3 Motion Range and Specifications

3.1 Determination of Safety Fence Installation Location from Motion Range

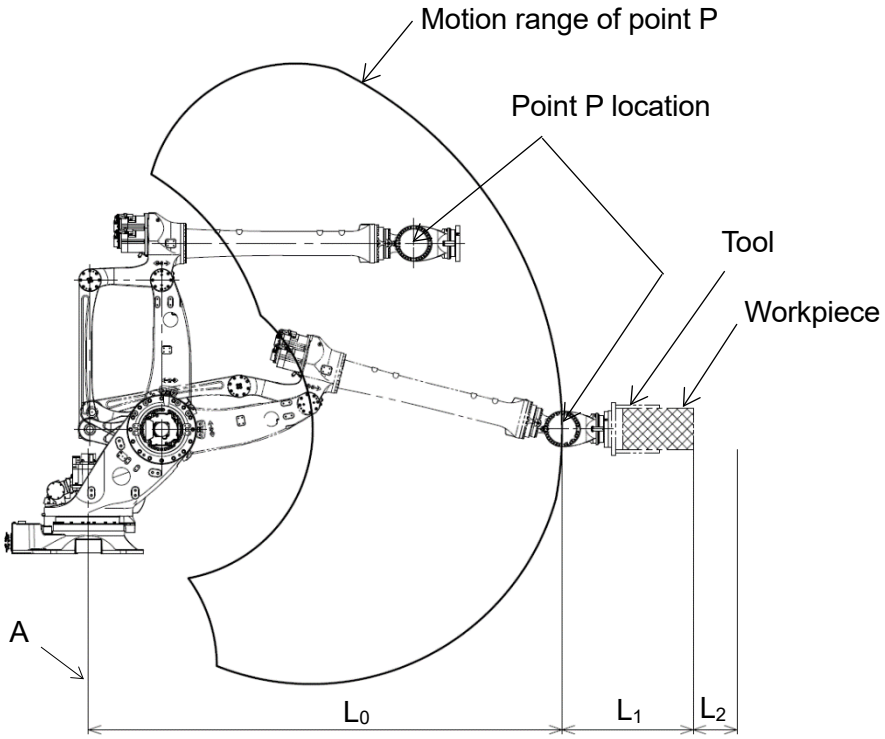

The motion range of the robot described below is represented by the motion range of point P in the figure. Therefore, as shown in the figure below, the safety fence needs to be ensured outside the circle whose radius is $L_0+L_1+L_2$, where L_0 is the length from the center line of the arm (point A shown in the figure), L_1 is the total length from the wrist flange to the outer edge of the largest workpiece held by any tool, and L_2 is the safety margin. For the length of L_0, see "3.2 Motion Range and Specifications."

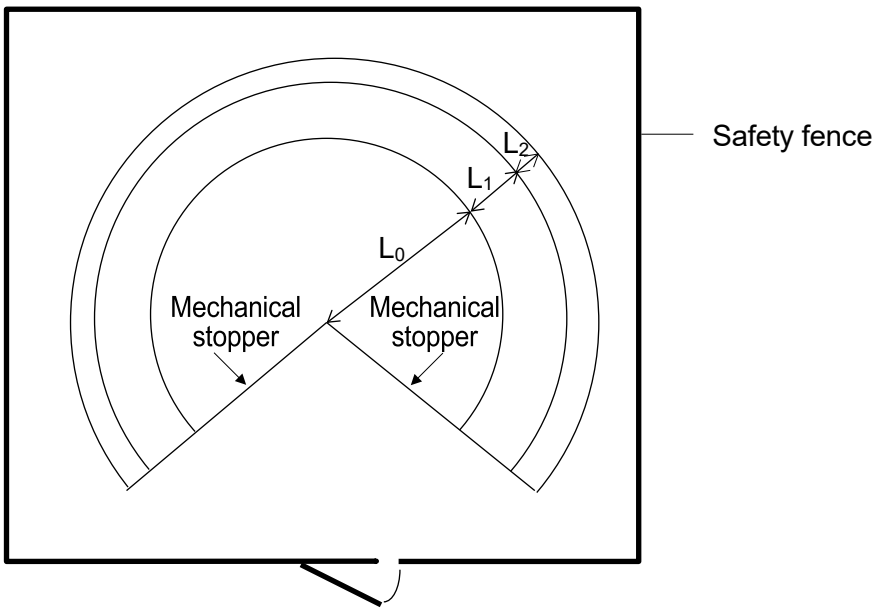

3.2 Motion Range and Specifications

■ MXP360L

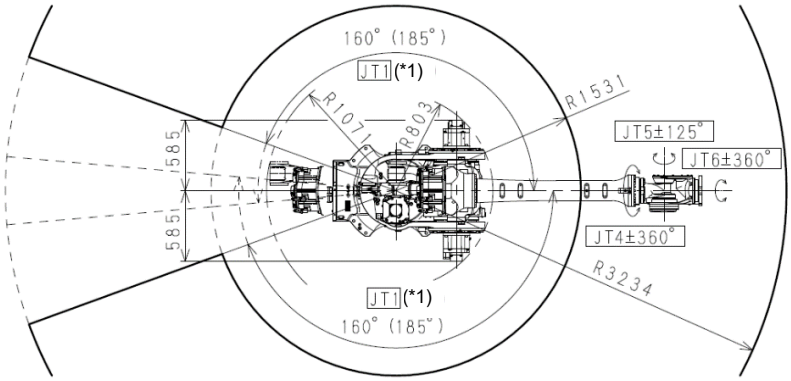

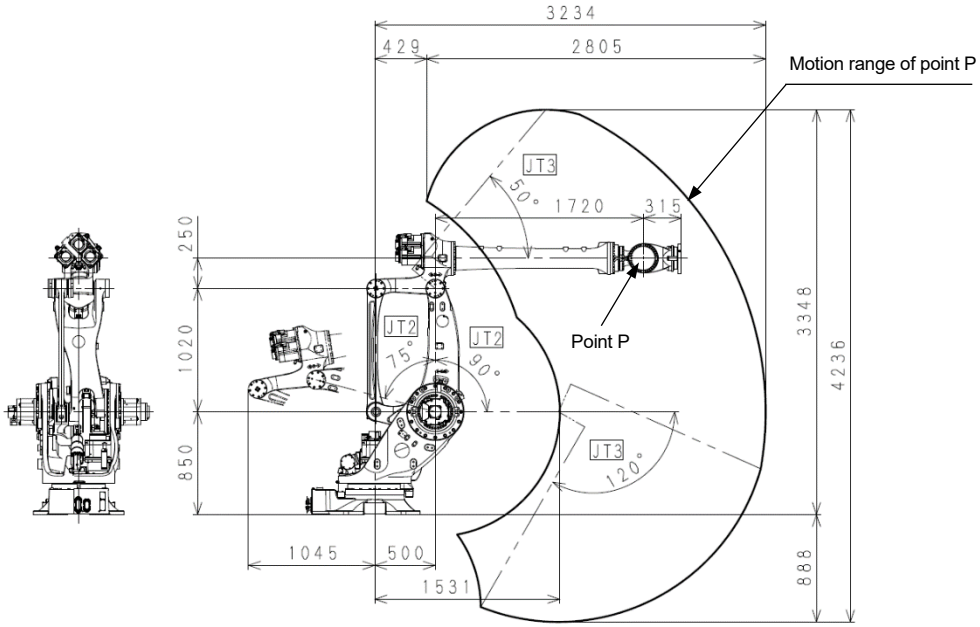

Model	Vertically articulated robot		
Degree of freedom of motion	6		
Motion range and speed	JT	Motion range	Maximum speed*3
	1	±160°(±185°)*1	100°/s
	2	+90° to −75°	86°/s
	3	+50° to −120°	86°/s
	4	±360°	105°/s
	5	±125°	105°/s
	6	±360°	165°/s
Maximum payload	360 kg		
Wrist load capacity	JT	Torque	Moment of inertia
	4	2,300 N·m	350 kg·m^2
	5	2,300 N·m	350 kg·m^2
	6	1,300 N·m	230 kg·m^2
Repeated positional accuracy	±0.08 mm		
Mass	1,550 kg		
Acoustic noise	69 dB (A)*2		

*1 JT1 motion range
When using JT1 with the motion range of ±160° to ±185°, an optional mechanical stopper is needed. In that case, maximum motion range is limited to 320°.
For details, please contact Kawasaki.

*2 Measurement conditions
- Equivalent to ISO 11201
- Reference operation in Kawasaki

The acoustic noise level depends on robots, loads and operation conditions, and it may exceed 80 dB depending on the application motion such as moving a single axis at the maximum speed. Protect personnel from noise as necessary.

*3 The values in the table are maximum values and vary depending on conditions such as load and motion range.
For details, please contact Kawasaki.

■MXP410X

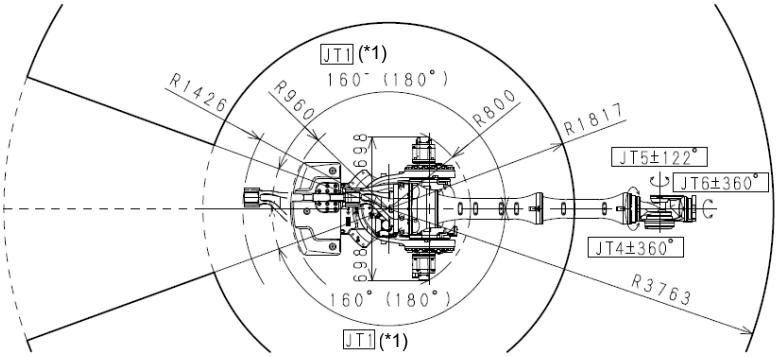

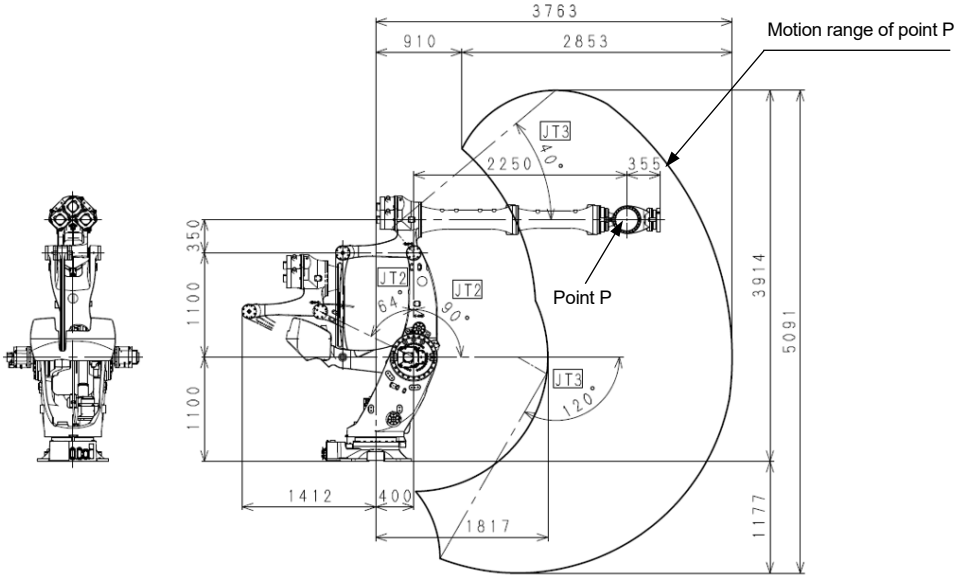

Model	Vertically articulated robot		
Degree of freedom of motion	6		
Motion range and speed	JT	Motion range	Maximum speed*3
	1	±160°(±180°)*1	82°/s
	2	+90° to −64°	70°/s
	3	+40° to −120°	70°/s
	4	±360°	110°/s
	5	±122°	110°/s
	6	±360°	160°/s
Maximum payload	410 kg		
Wrist load capacity	JT	Torque	Moment of inertia
	4	3,000 N·m	390 kg·m^2
	5	3,000 N·m	390 kg·m^2
	6	1,900 N·m	250 kg·m^2
Repeated positional accuracy	±0.12 mm		
Mass	2,800 kg		
Acoustic noise	72 dB (A)*2		

*1 JT1 motion range
When using JT1 with the motion range of ±160° to ±180°, an optional mechanical stopper is needed. In that case, maximum motion range is limited to 320°.
For details, please contact Kawasaki.

*2 Measurement conditions
- Equivalent to ISO 11201
- Reference operation in Kawasaki

The acoustic noise level depends on robots, loads and operation conditions, and it may exceed 80 dB depending on the application motion such as moving a single axis at the maximum speed. Protect personnel from noise as necessary.

*3 The values in the table are maximum values and vary depending on conditions such as load and motion range.

■MXP710L

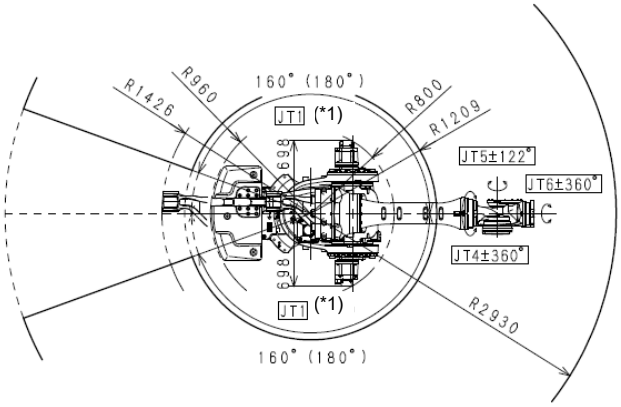

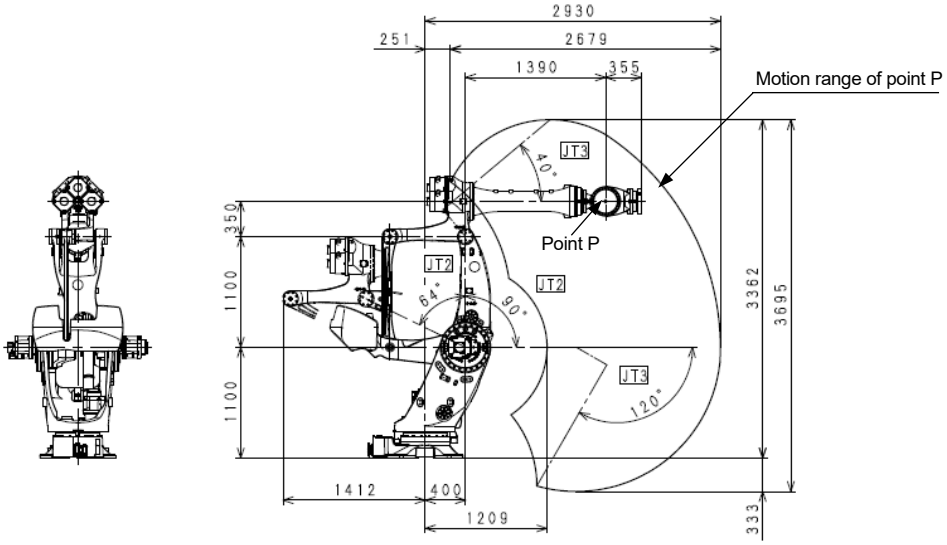

Model	Vertically articulated robot		
Degree of freedom of motion	6		
Motion range and speed	JT	Motion range	Maximum speed*3
	1	±160°(±180°)*1	82°/s
	2	+90° to −64°	70°/s
	3	+40° to −120°	70°/s
	4	±360°	90°/s
	5	±122°	90°/s
	6	±360°	160°/s
Maximum payload	710 kg		
Wrist load capacity	JT	Torque	Moment of inertia
	4	3,700 N·m	500 kg·m^2
	5	3,700 N·m	500 kg·m^2
	6	1,900 N·m	250 kg·m^2
Repeated positional accuracy	±0.08 mm		
Mass	2,750 kg		
Acoustic noise	73 dB (A)*2		

*1 JT1 motion range
When using JT1 with the motion range of ±160° to ±180°, an optional mechanical stopper is needed. In that case, maximum motion range is limited to 320°.
For details, please contact Kawasaki.

*2 Measurement conditions
- Equivalent to ISO 11201
- Reference operation in Kawasaki

The acoustic noise level depends on robots, loads and operation conditions, and it may exceed 80 dB depending on the application motion such as moving a single axis at the maximum speed. Protect personnel from noise as necessary.

*3 The values in the table are maximum values and vary depending on conditions such as load and motion range.

3.3 Mechanical Stoppers

Mechanical stoppers are installed at the points shown in the figure below at JT1, JT2, and JT3 of the base axes.

■MXP360L

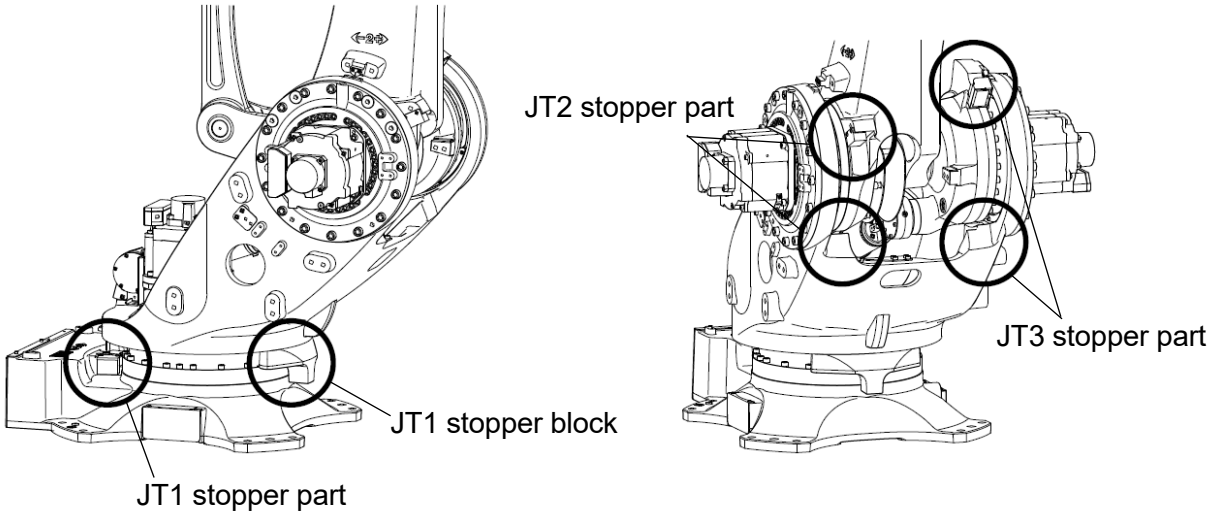

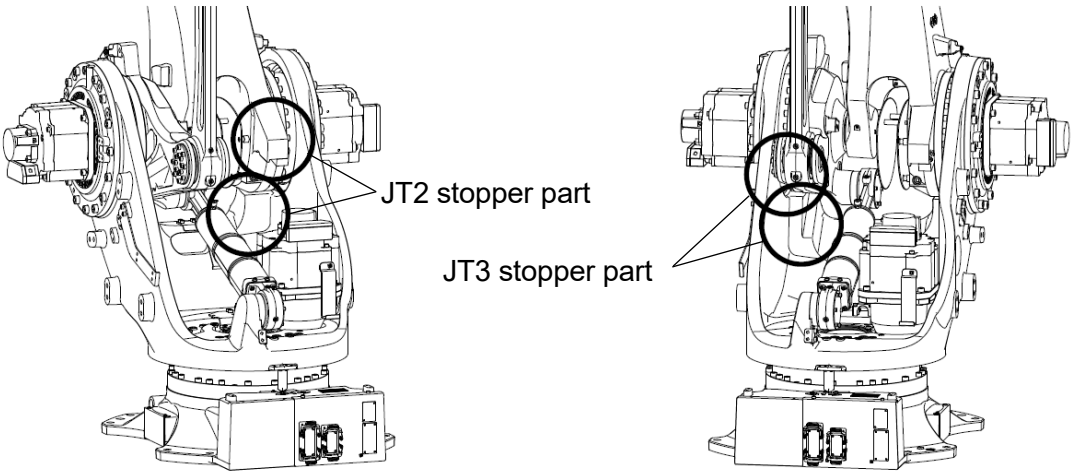

■ **MXP410X, MXP710L**

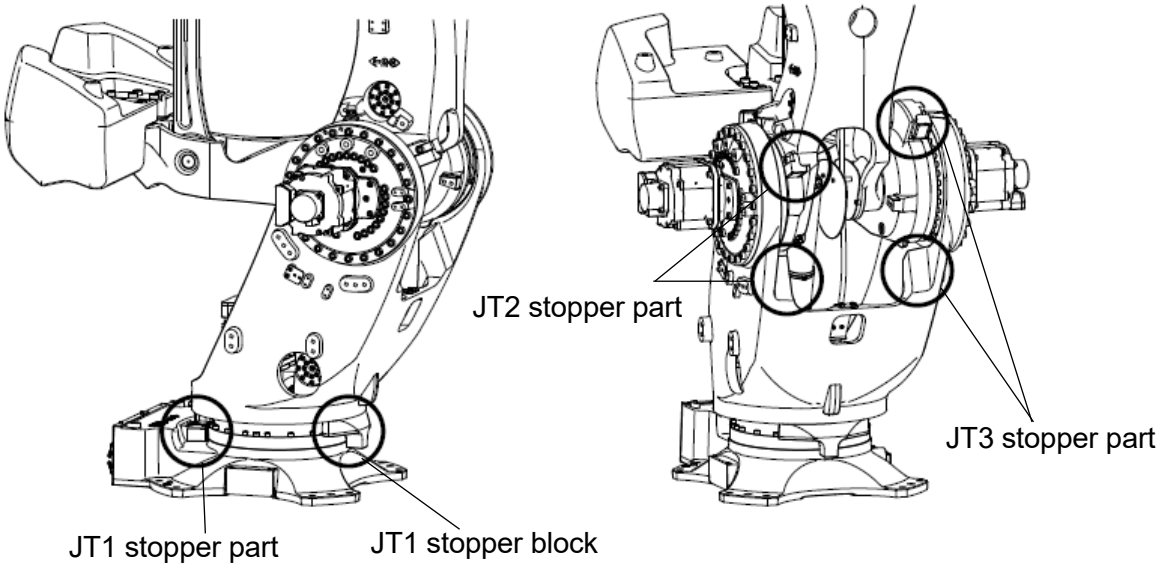

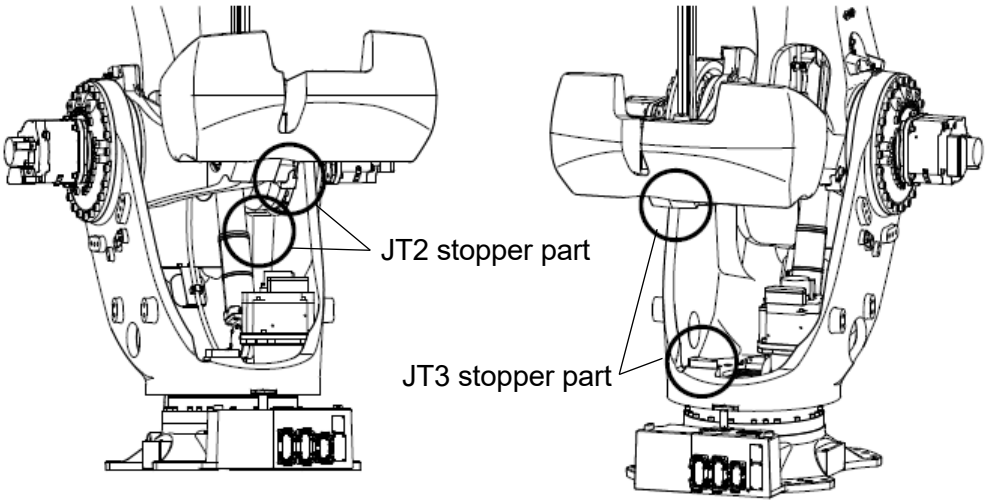

3.3.1 JT1 Stopper Block

■Stopper block mounting

The motion range for the standard stopper is 160° to the positive (+) side and 160° to the negative (−) side.
It is also possible to reduce the motion range by mounting two stopper blocks (option).

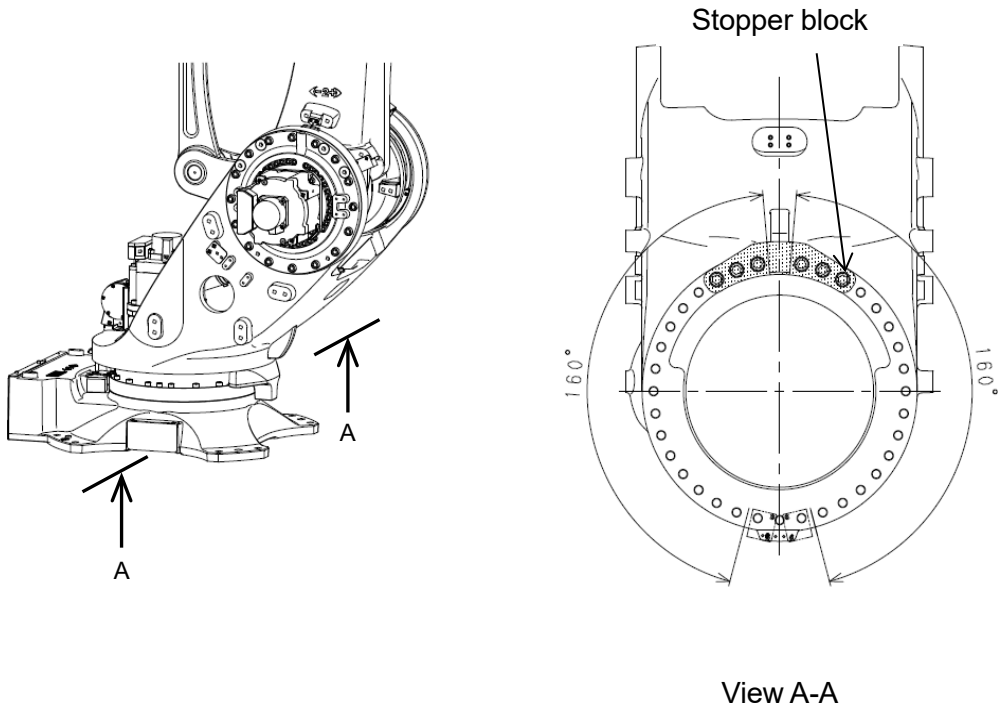

■When using a single stopper block

The motion range that can be adjusted by changing the stopper block mounting position is limited to up to 180° on both the positive (+) side and the negative (–) sides due to harness treatment and control restrictions.

If a stopper block is mounted as shown in the figure below, the motion range is 180° for the positive (+) side and 140° for the negative (−) side.

The stopper block is secured with M20×70 hexagon socket head bolts (6 bolts), hardness category: 10.9.

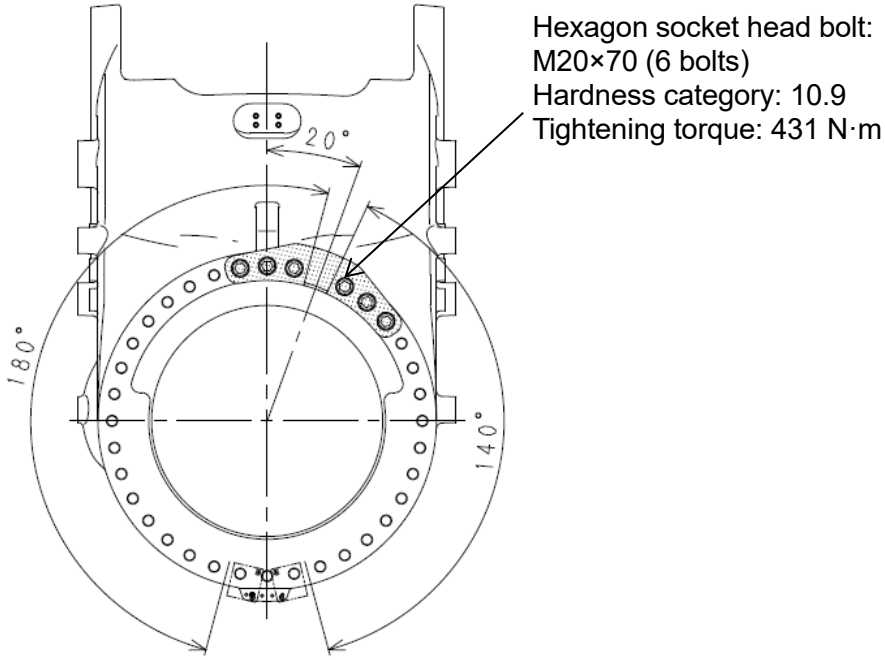

■When using two stopper blocks

The motion range that can be adjusted by changing the stopper block mounting position is limited to up to 180° on both the positive (+) side and the negative (–) sides due to harness treatment and control restrictions. However, the total combined motion range of both sides can be adjusted between 40° and 240°.

If stopper blocks are mounted as shown in the figure below, the motion range is 120° for the positive (+) side and 120° for the negative (−) side.

The stopper blocks are secured with M20×70 hexagon socket head bolts (6 bolts each), hardness category: 10.9.

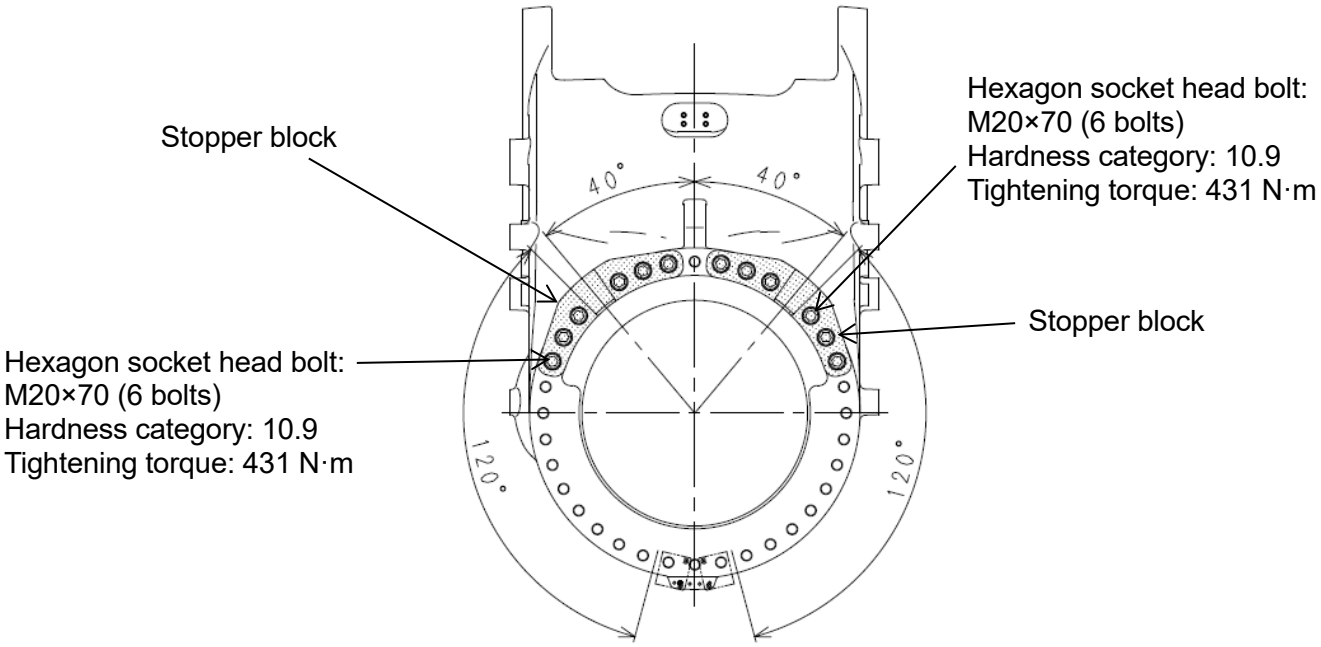

4 Transportation Methods

The robot can be transported by the following two methods: using a crane or a forklift. The procedures differ for when a transporting stand is used or when only the arm is transported without the stand.

4.1 Using a Transporting Stand

The arm is delivered on a transporting stand as shown in the figure below.
There are three types of transporting stands. For the forms, refer to the figure below.

Transporting stand	Type 1 (for MXP360L) 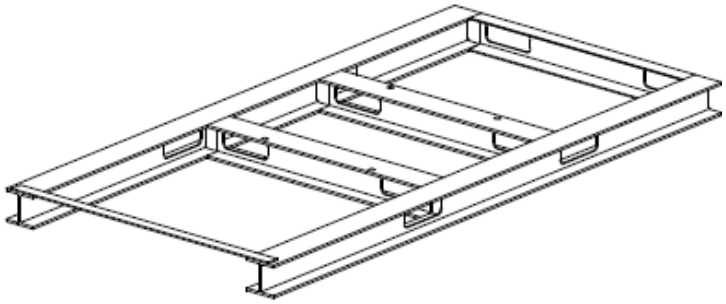 Type 2 (for MXP410X) 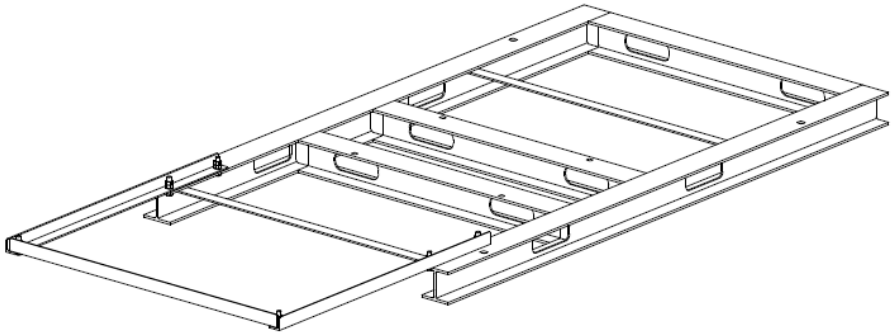 Type 3 (for MXP710L) 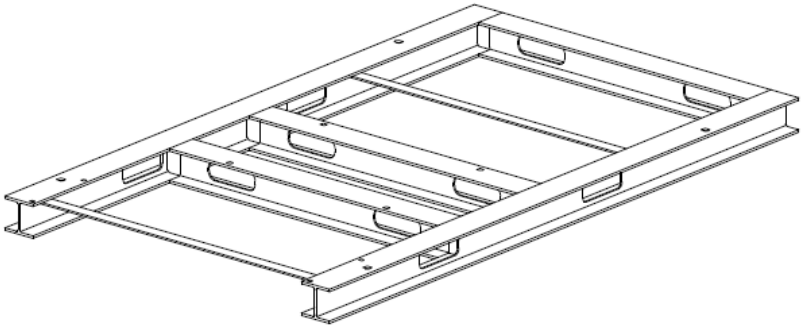

<table>
<tr><td rowspan="8">Delivery posture</td><td colspan="2">Type 1 (for MXP360L)
 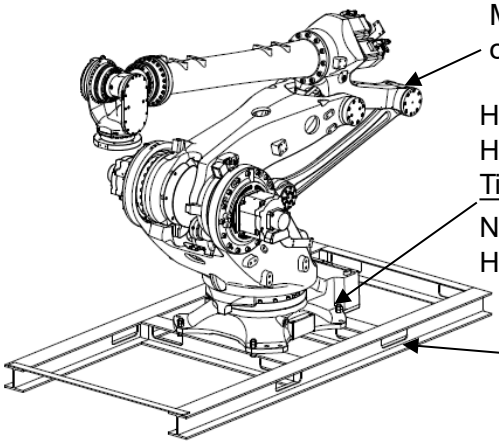
Robot arm
MXP360L: 1,550 kg (except options)
Hexagon head bolt M20x80L (4 bolts)
Hardness category: 10.9 or more
Tightening torque: 204 N·m
Nut: two nuts each for M20 (8 pcs)
Hardness category: 10
Transporting stand: 185 kg</td></tr>
<tr><td>JT1</td><td>0°</td></tr>
<tr><td>JT2</td><td>-75°</td></tr>
<tr><td>JT3</td><td>+10°</td></tr>
<tr><td>JT4</td><td>0°</td></tr>
<tr><td>JT5</td><td>-100°</td></tr>
<tr><td>JT6</td><td>0°</td></tr>
<tr><td colspan="2">Type 2 (for MXP410X)
 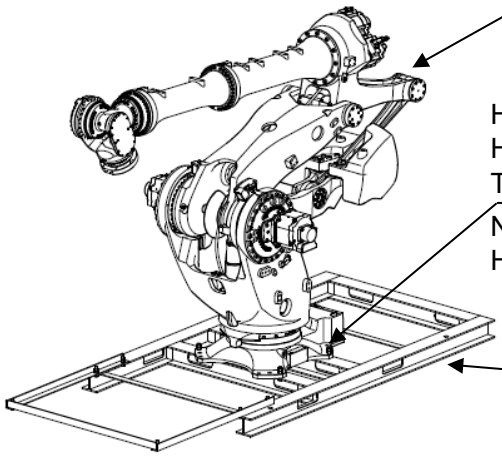
Robot arm
MXP410X: 2,800 kg (except options)
Hexagon head bolt M20x80L (4 bolts)
Hardness category: 10.9 or more
Tightening torque: 204 N·m
Nut: two nuts each for M20 (8 pcs)
Hardness category: 10
Transporting stand: 230 kg</td></tr>
<tr><td>JT1</td><td>0°</td></tr>
<tr><td>JT2</td><td>-64°</td></tr>
<tr><td>JT3</td><td>+2.5°</td></tr>
<tr><td>JT4</td><td>0°</td></tr>
<tr><td>JT5</td><td>-100°</td></tr>
<tr><td>JT6</td><td>0°</td></tr>
</table>

<table>
<tr><td rowspan="7">Delivery posture</td><td colspan="2">Type 3 (for MXP710L)
 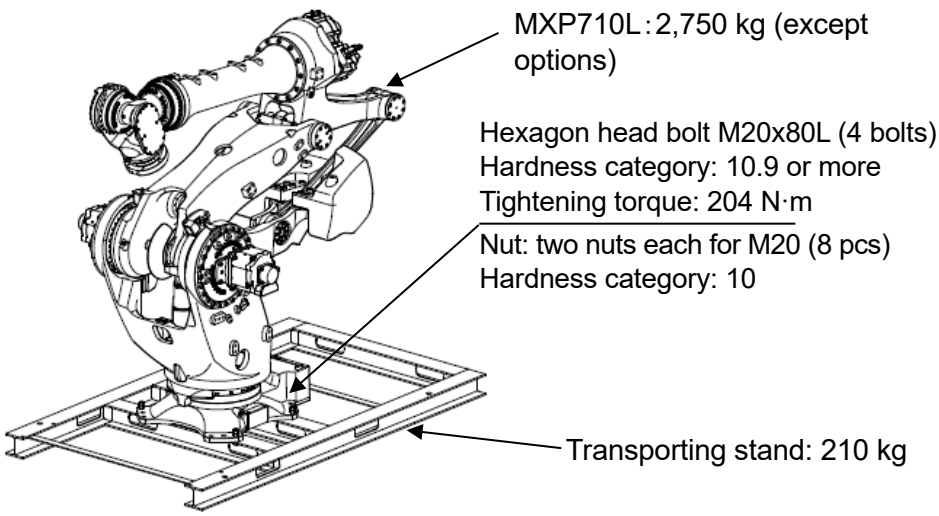
</td></tr>
<tr><td>JT1</td><td>0°</td></tr>
<tr><td>JT2</td><td>-64°</td></tr>
<tr><td>JT3</td><td>+4°</td></tr>
<tr><td>JT4</td><td>0°</td></tr>
<tr><td>JT5</td><td>-100°</td></tr>
<tr><td>JT6</td><td>0°</td></tr>
</table>

Center of gravity	Type 1 (for MXP360L) 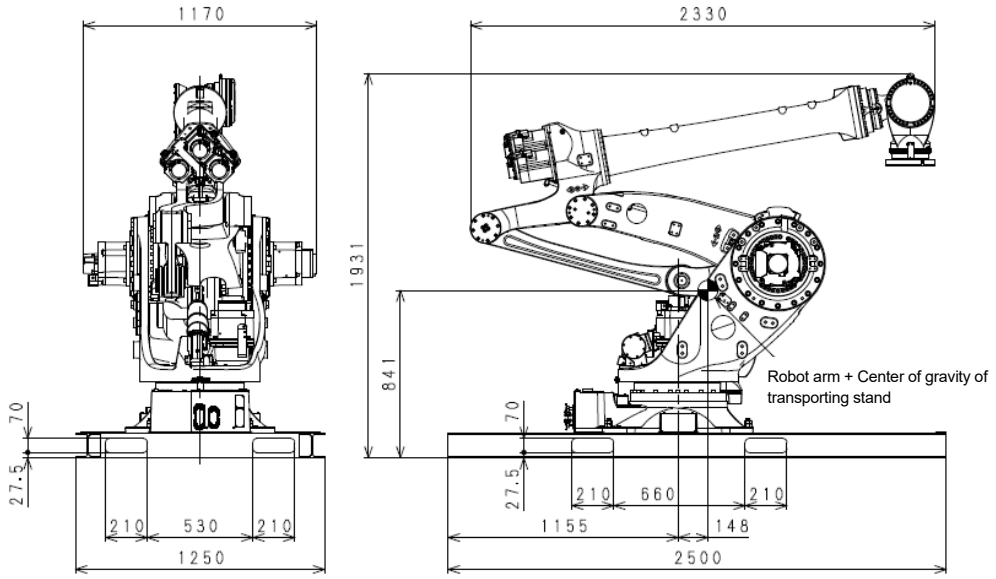 Type 2 (for MXP410X) 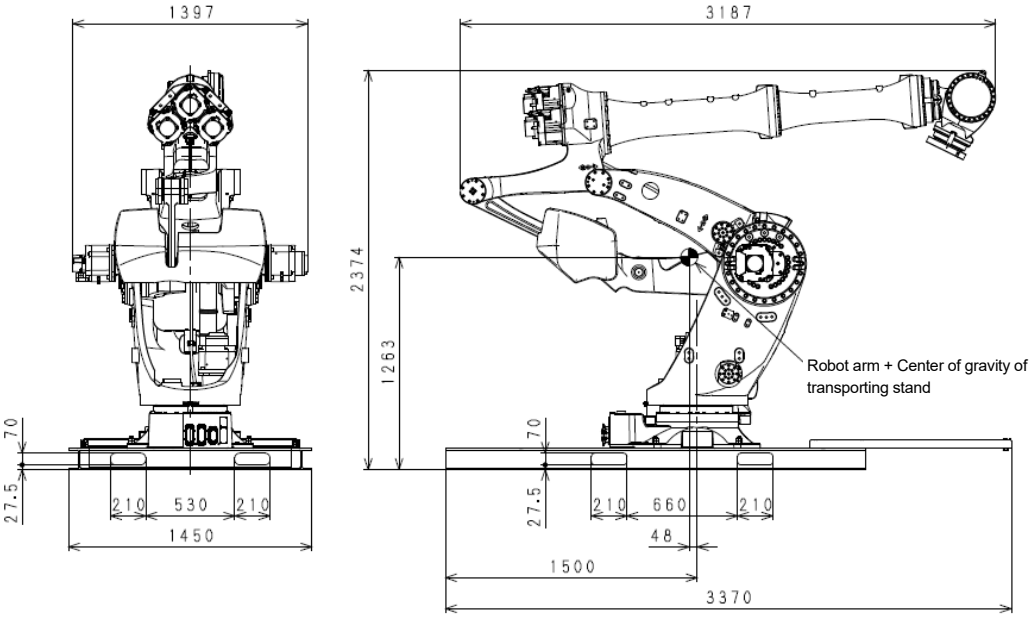

Center of gravity	Type 3 (for MXP710L) 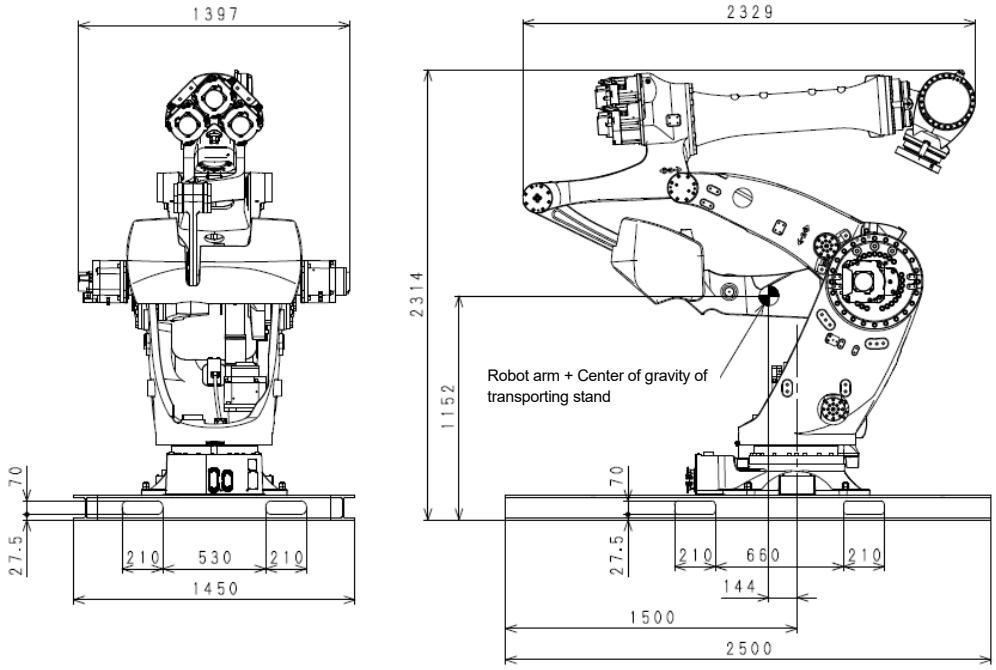

4.2 Wire Sling Suspension

Attach the hoisting jigs and hooks as shown in the figure below (MXP360L: three locations, MXP410X, MXP710L: four locations), and hoist the arm with wires.

WARNING

There is a risk the robot will fall if suspended via methods other than those prescribed.

CAUTION

When suspending the robot, care is required as it may tip forward or back depending on its posture or installed options. If the robot is suspended while at an angle, shocks may result in swinging or damage; wires may catch on the harness or piping; and external parts may cause interference resulting in damage. After transport is completed, remove the lifting jig from the robot arm.

Model		MXP360L (Mass excluding options: 1,550 kg)
Suspended posture		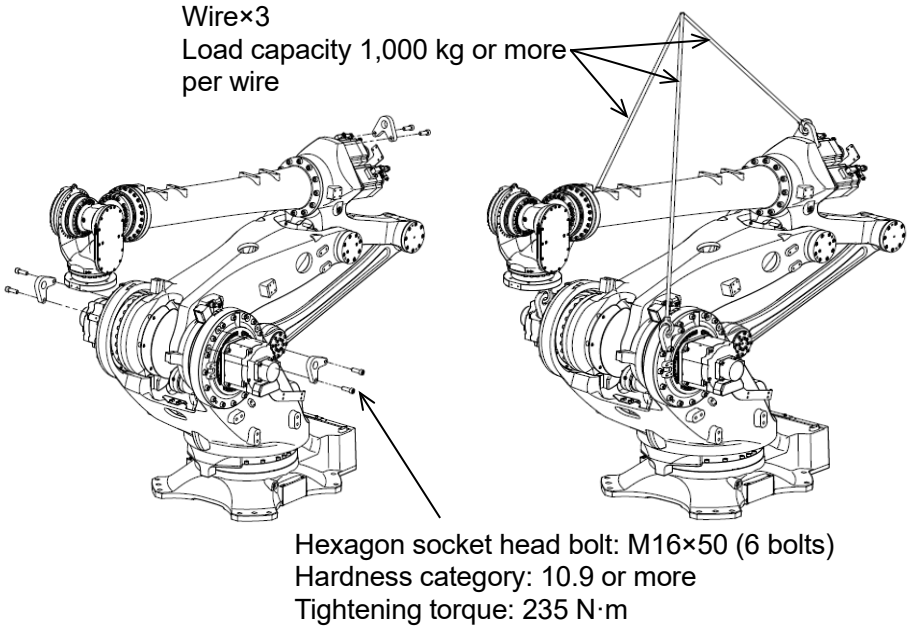
Hoisting posture	**JT1**	0°
	JT2	-75°
	JT3	+10°
	JT4	0°
	JT5	-100°
	JT6	0°

Model		MXP410X (Mass excluding options: 2,800 kg)
Suspended posture		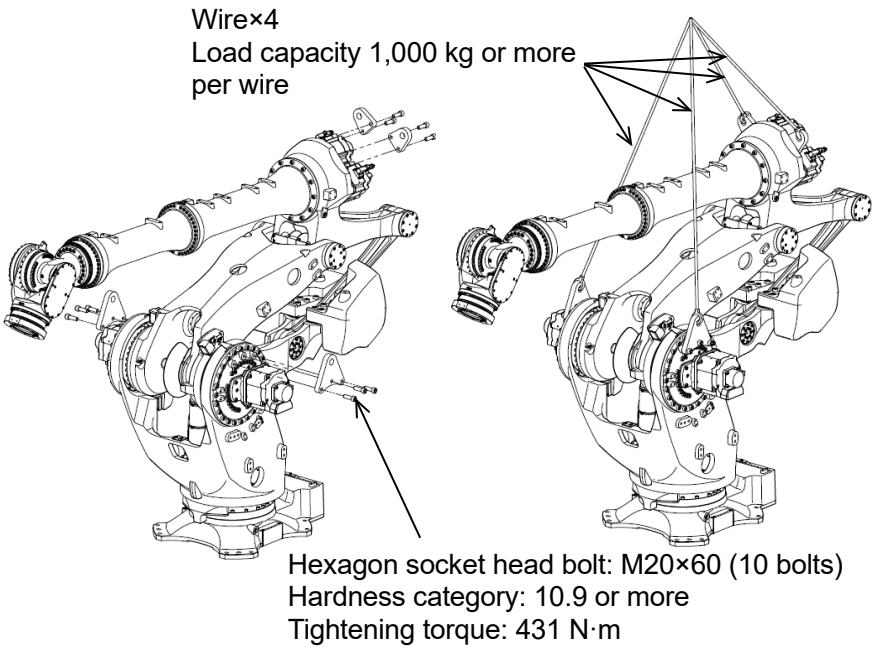
Hoisting posture	JT1	0°
	JT2	-64°
	JT3	+2.5°
	JT4	0°
	JT5	-55°
	JT6	0°

Model		MXP710L (Mass excluding options: 2,750 kg)
Suspended posture		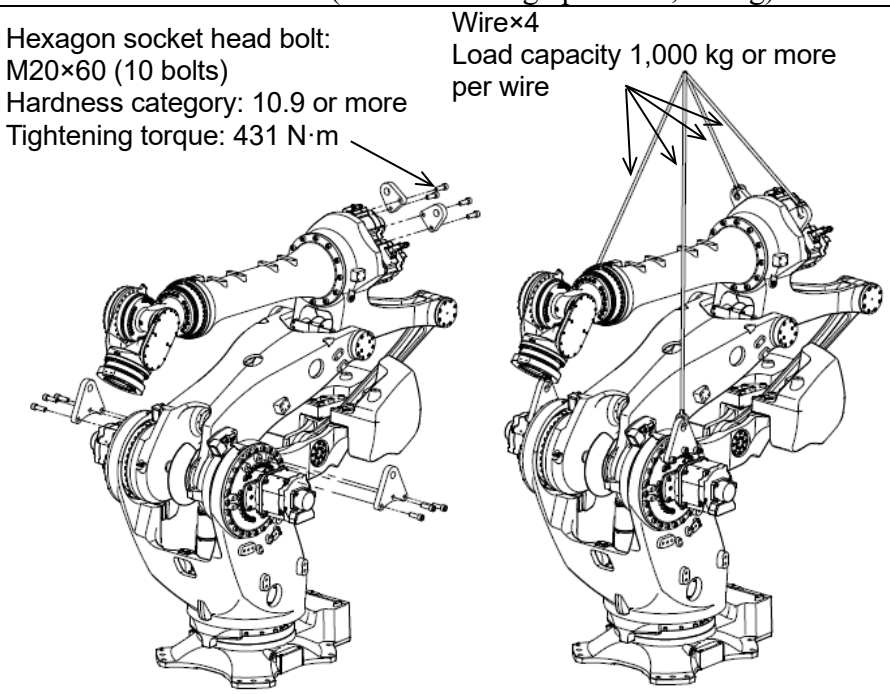
Hoisting posture	JT1	0°
	JT2	-64°
	JT3	+4°
	JT4	0°
	JT5	-55°
	JT6	0°

4.3 Forklift

Mount a forklift lifting jig to the arm and transport it as shown in the figure below.
Refer to "4.2 Wire Sling Suspension" for the posture of the robot during transport.

CAUTION

1. **Always check that the forklift forks are sufficiently engaged with the lifting jig.**
2. **When transporting, be careful not to overbalance and tip the forklift on sloping ground or uneven road surfaces.**
3. **After transport is completed, remove the lifting jig from the robot arm.**

■MXP360L

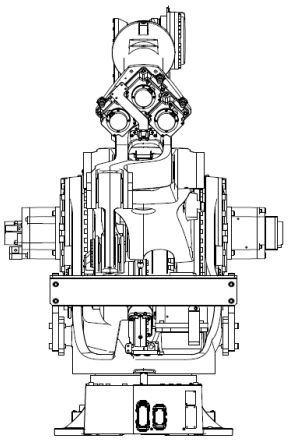

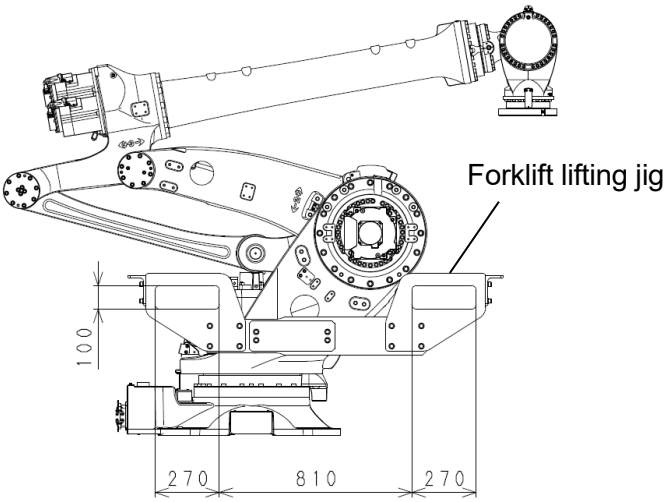

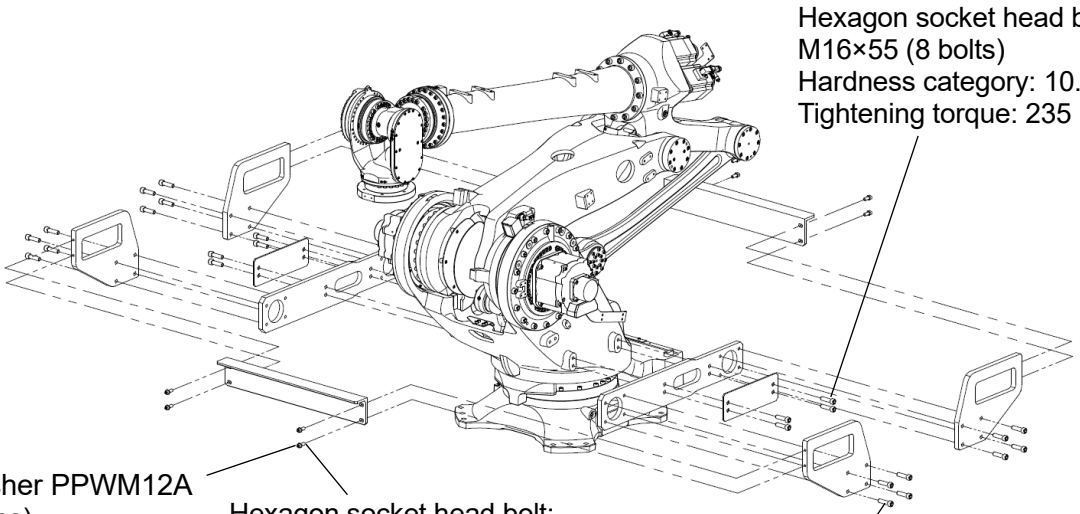

■ **MXP410X, MXP710L**

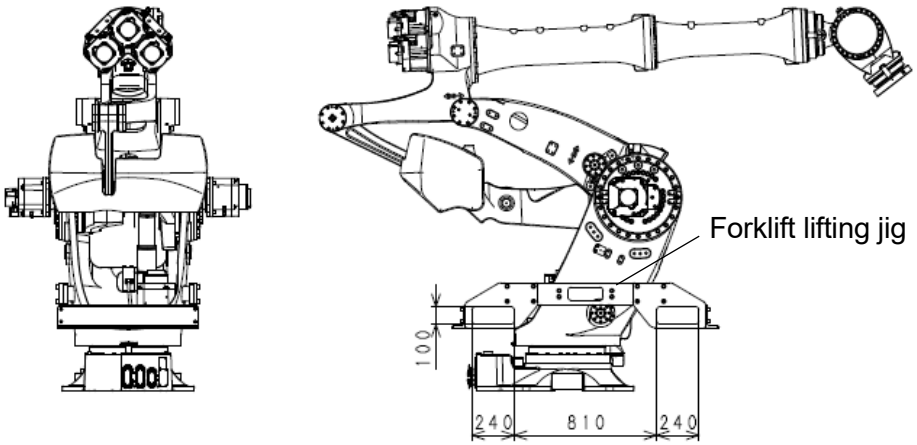

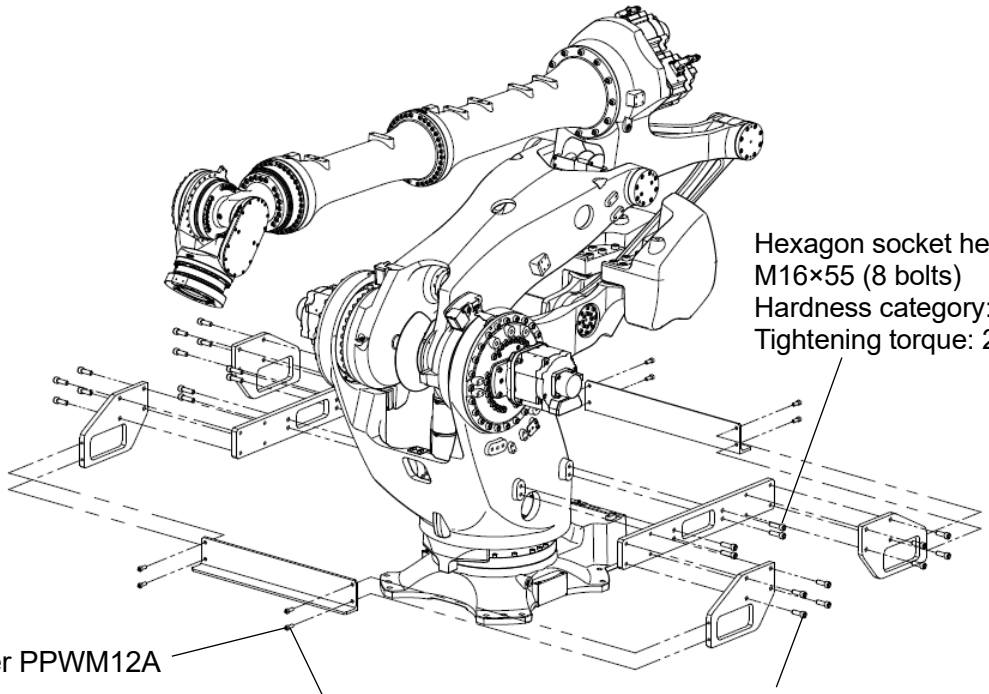

Hexagon socket head bolt:
M16×55 (8 bolts)
Hardness category: 10.9 or more
Tightening torque: 235 N·m

Washer PPWM12A
(8 pcs)

Hexagon socket head bolt:
M12×30 (8 bolts)
Hardness category: 10.9 or more
Tightening torque: 98 N·m

Hexagon socket head bolt:
M16×55 (16 bolts)
Hardness category: 10.9 or more
Tightening torque: 235 N·m

5 Base Installation Dimensions

Use the bolt holes and fix with high tensile bolts during base installation.

Model	MXP360L, MXP410X, MXP710L
Dimensions of the installed part	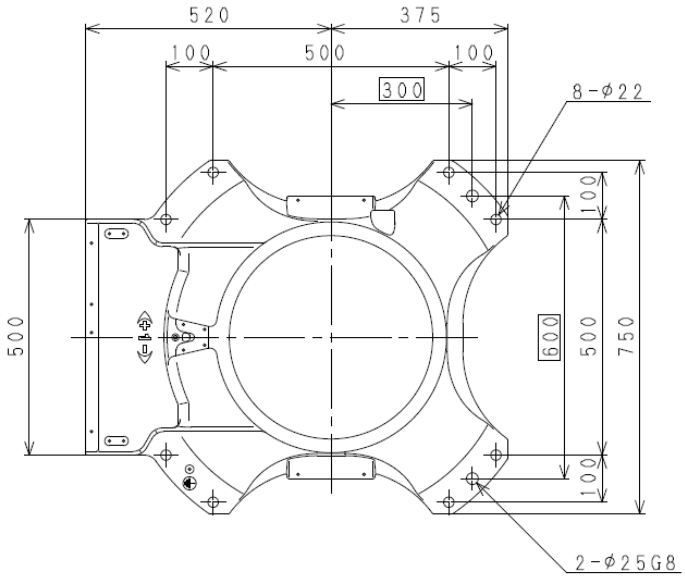
Cross-section figure of the installed part	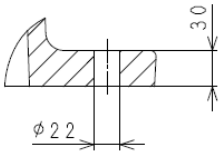
Bolt holes	8-⌀22
High tensile bolts	8-M20 Material: SCM435 Hardness category: 10.9 or more
Tightening torque	431 N·m
Installation surface angle	±5° or less

6 Reactive Forces on Installation Area During Operation

The reactive forces acting on the installation surface during robot operation are shown in the table below. These forces should be taken into consideration during installation.

Model	Robot motion	M (tipping moment)	T (rotational torque)
MXP360L	At normal operation	33,000 N·m	12,500 N·m
	At emergency stop*1	78,000 N·m	31,000 N·m
MXP410X	At normal operation	35,000 N·m	12,500 N·m
	At emergency stop*1	90,000 N·m	31,000 N·m
MXP710L	At normal operation	39,000 N·m	12,500 N·m
	At emergency stop*1	101,000 N·m	31,000 N·m

*1 Stop category : 0

For details of M and T, refer to the following chapter.

7 Installation

7.1 Installing the Base Directly on the Floor

As shown in the figure below, fix a steel plate with a thickness of at least 35 mm with anchors. Secure the steel plate firmly enough to withstand counterforce from the robot.
When selecting and installing anchors, refer to the anchor manufacturer's design guidelines and consider the safety factor.

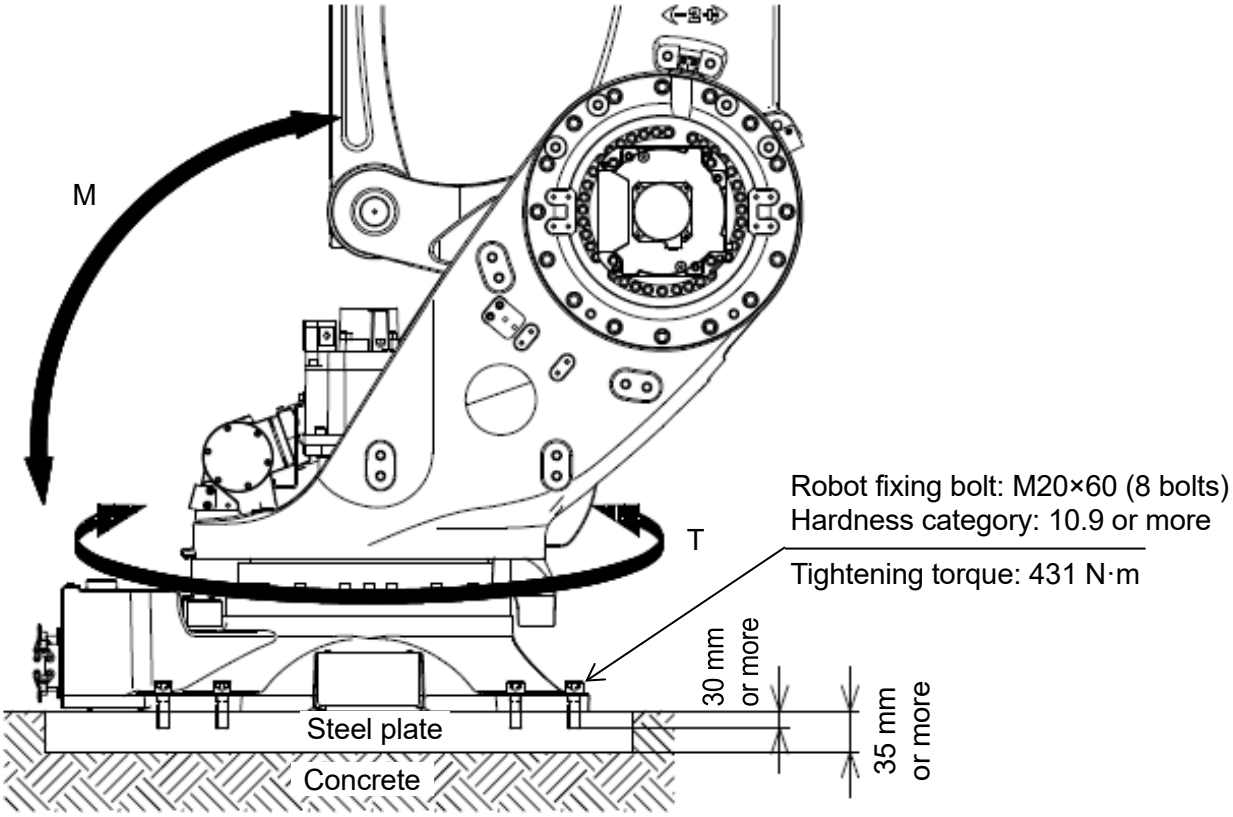

8 Mounting of Tools

WARNING

When mounting a tool, be sure to turn OFF the controller power and external power, and after clearly displaying that "inspection and maintenance is in progress," lock out and tag out the external power so that an operator or third party does not accidentally turn ON the power, causing an unexpected situation such as electric shock.

8.1 Wrist Tip (Flange Surface) Dimensions

The tip of the robot arm features a flange for mounting tools. Fixing bolts should be bolted through to the tapped holes machined into the flange, as shown in the figure below. Also, use the pin holes to determine tool locations.

MXP360L	MXP410X, MXP710L
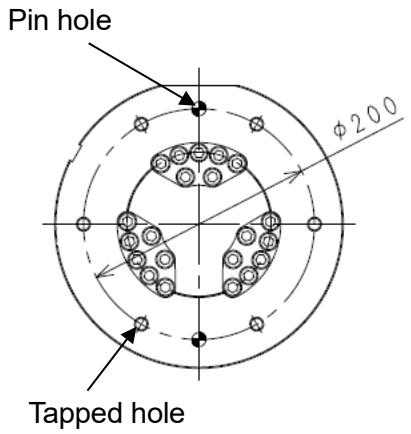	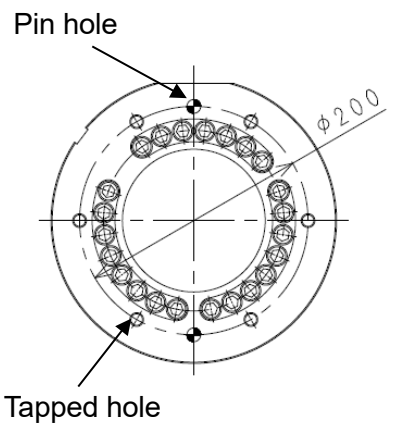

8.2 Mounting Bolt Specifications

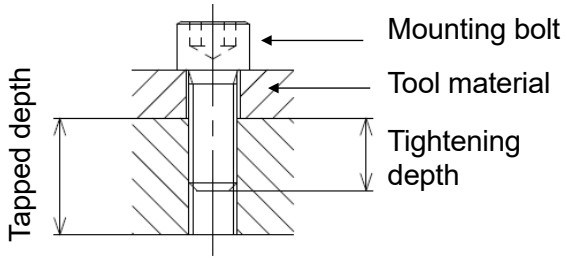

Select mounting bolts of sufficient length according to the thickness of the tool in use, such that they reach the rated tightening depth.
Additionally, use high tensile bolts, and tighten to the specified torque.

CAUTION

If the tightening depth is above the rated value, then the mounting bolts will bottom out and the tool may not be secured.

Model	MXP360L	MXP410X, MXP710L
Tapped hole	6-M12	6-M12
⌀D	⌀200	⌀200
Pin hole	2-⌀12H7, depth 12	2-⌀12H7, depth 12
Tapped depth	29 mm through-hole	36 mm through-hole
Tightening depth	18 to 28 mm	25 to 35 mm
High tensile bolts	SCM435, 10.9 or more	SCM435, 10.9 or more
Tightening torque	129.0 N·m	129.0 N·m

8.3 Load Capacity

The load mass capacity of the robot, including tool mass, is fixed for each robot type. Additionally, strictly observe the restrictions for load torque and load moment of inertia around each wrist axis (JT4, JT5, and JT6) as shown below.

CAUTION

If a load above the specified range is applied to the robot, this can result in deteriorated operational functionality or service life. Load mass includes all tool masses such as any hands and tool changers. If an amount other than the rated load will be applied, consult with Kawasaki.

The load torque and moment of inertia can be calculated using the following formula.

Calculation formula

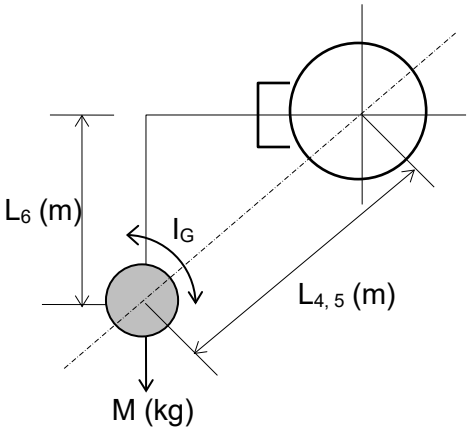

Load mass (including tool): $M \leq M_{max}$ (kg)

Load torque: $T = 9.8 \cdot M \cdot L$ (N·m)

Load moment of inertia: $I = M \cdot L^2 + I_G$ (kg·m^2)

M_{max}: Maximum load mass: See section 3.2.

L: Distance from center of axis rotation to load center of gravity (Units: m) (See diagram)

- $L_{4,5}$: Distance from JT4 (5) center of rotation to load center of gravity
- L_6: Distance from JT6 center of rotation to load center of gravity
- I_G: Moment of inertia around the center of gravity (Units: kg·m^2)

When calculating with the load divided between multiple locations (for example, tool and workpiece, etc.), use the total combined values as the load torque and moment of inertia.

Strictly adhere to the following restrictions regarding load of the wrist part.

1. Keep the load mass, including the tool mass, at or below the following values.

Model	Load mass
MXP360L	360 kg
MXP410X	410 kg
MXP710L	710 kg

2. There are restrictions for the load torque and load moment of inertia around each wrist axis (JT4, JT5, and JT6).
   Keep the load torque and load moment of inertia around each axis within the allowable ranges shown in the figure below.

CAUTION

After tool installation, always make sure to set the load via auxiliary function 0304. Operating the robot with incorrect settings may cause large vibrations, degradation of movement performance, and shortening of robot service life.

[NOTE]

After setting the load correctly, if you still want to suppress vibrations even more for application, decrease the acceleration/deceleration speed by modifying the taught points.

MXP360L

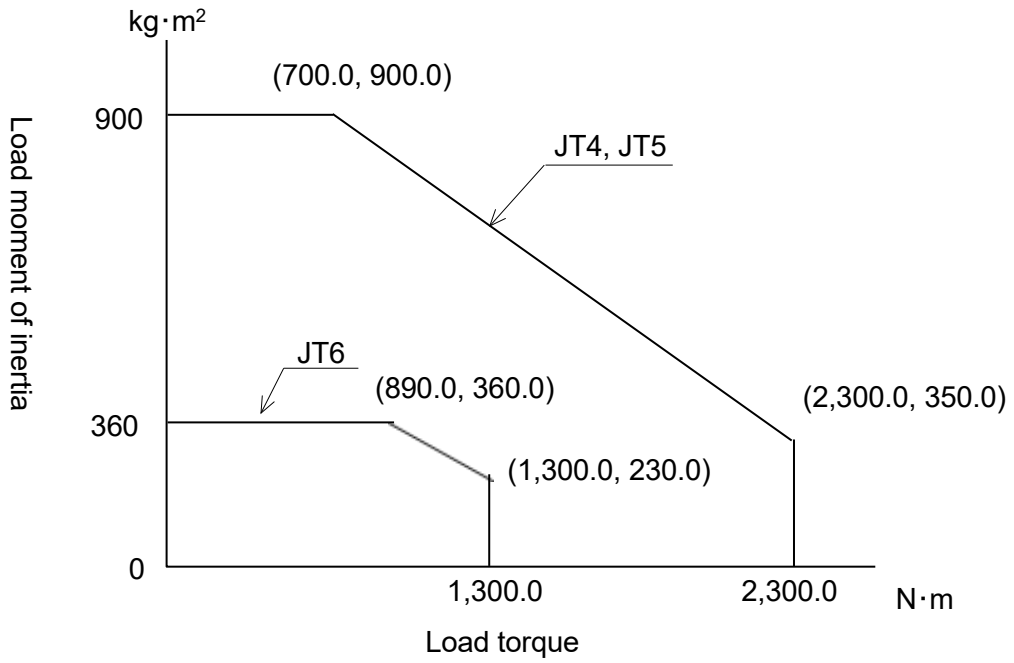

MXP410X

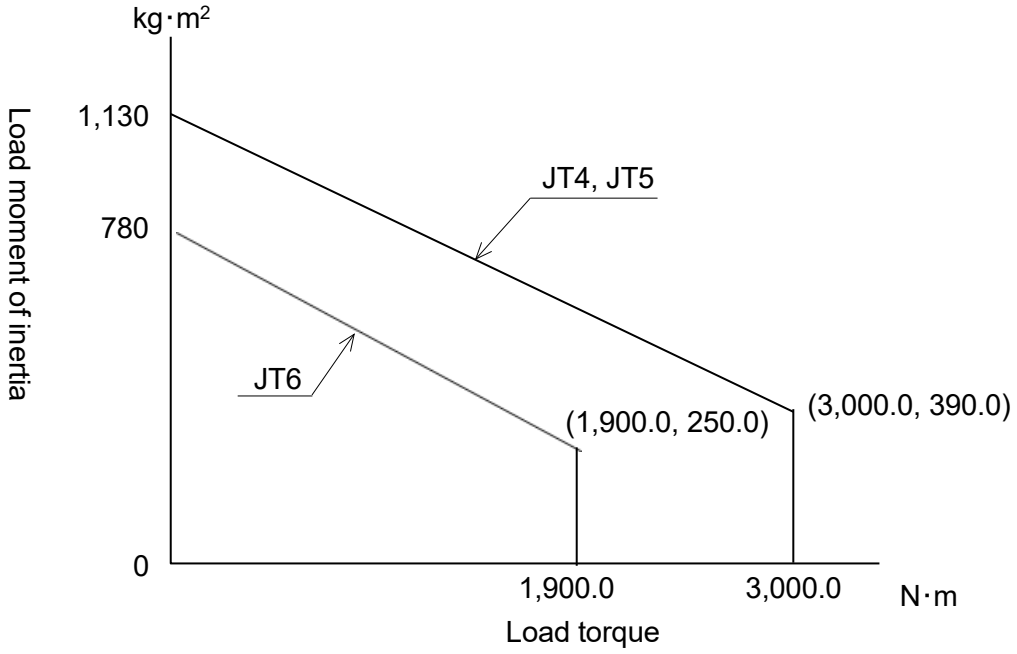

MXP710L

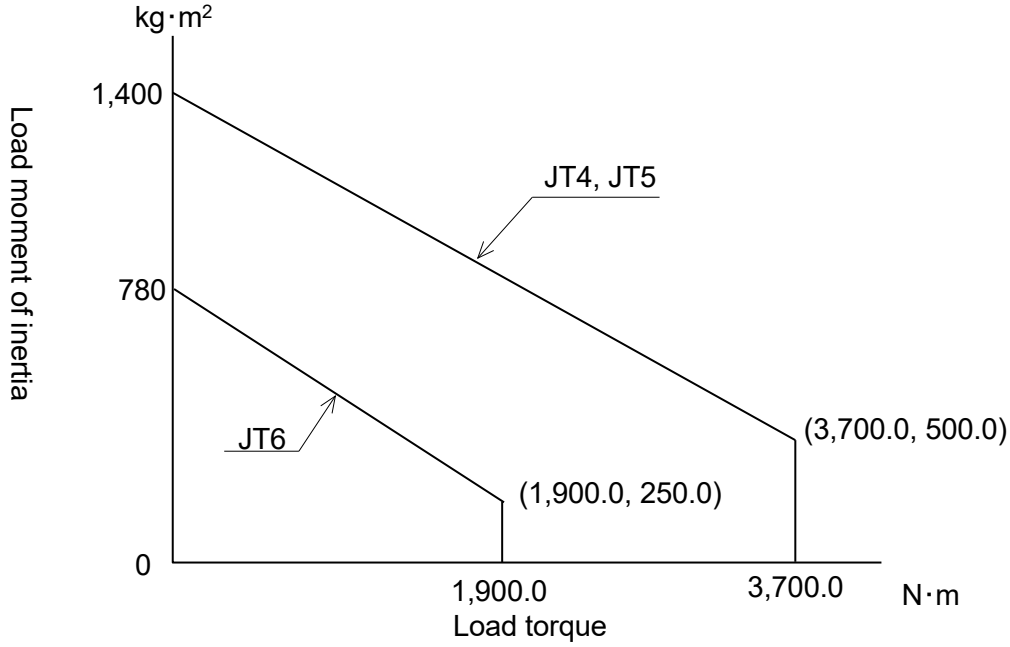

9 Mounting of External Devices

9.1 Service Tapped Hole Positions

Service tapped holes, shown in the figure below, are provided on each part of the robot arm for mounting external devices, wiring brackets, arm-fixing jigs, etc.

CAUTION

Perform a thorough operation check to confirm that mounted external devices, brackets, and fixing jigs for arm do not interfere with peripheral equipment or the robot arm itself.

■ MXP360L

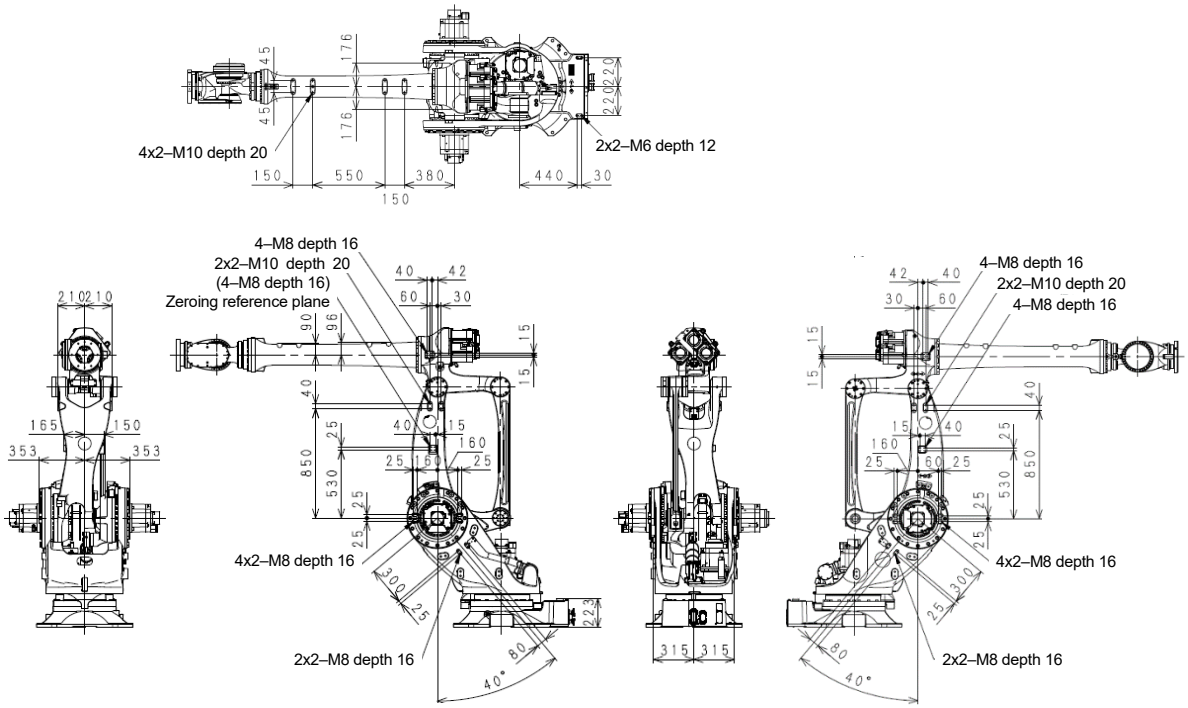

■MXP410X

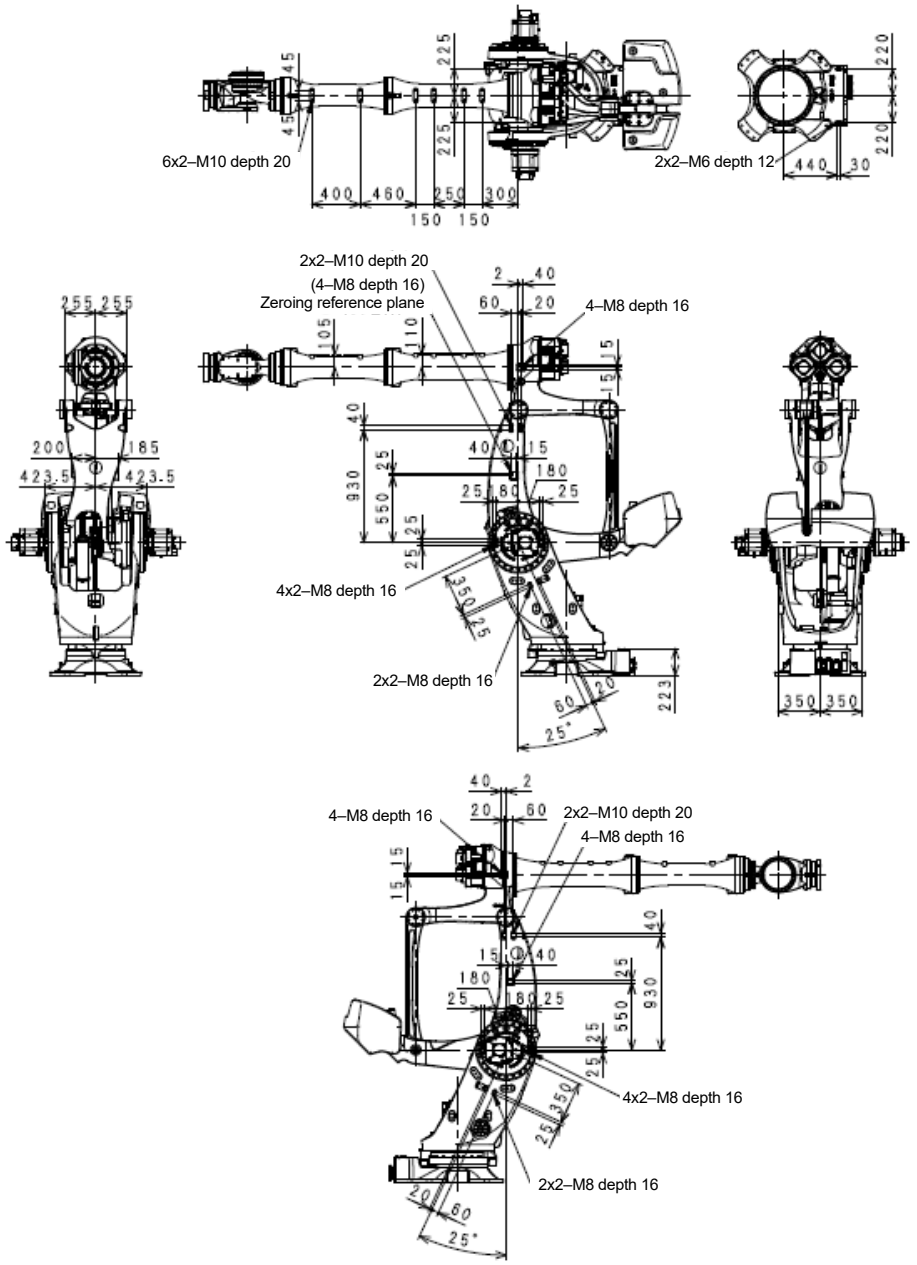
6x2–M10 depth 20
2x2–M6 depth 12
2x2–M10 depth 20
(4–M8 depth 16)
Zeroing reference plane
4–M8 depth 16
4x2–M8 depth 16
2x2–M8 depth 16
4–M8 depth 16
2x2–M10 depth 20
4–M8 depth 16
4x2–M8 depth 16
2x2–M8 depth 16

■MXP710L

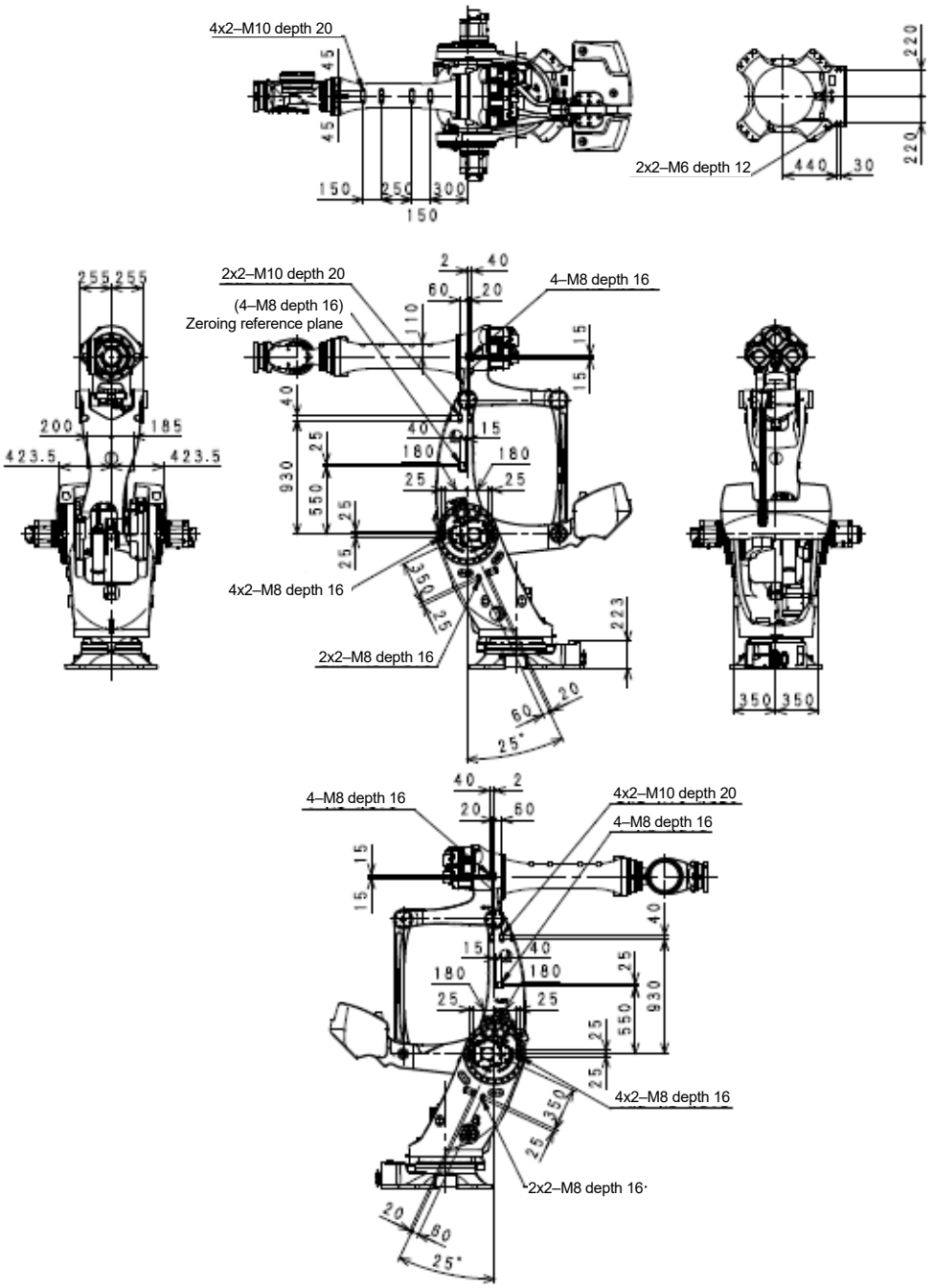
4x2–M10 depth 20
2x2–M6 depth 12
2x2–M10 depth 20
(4–M8 depth 16)
Zeroing reference plane
4–M8 depth 16
4x2–M8 depth 16
2x2–M8 depth 16
4–M8 depth 16
4x2–M10 depth 20
4–M8 depth 16
4x2–M8 depth 16
2x2–M8 depth 16

9.2 Calculation of External Device Load Capacity

The mass load capacity of the robot is fixed for each model. Additionally, strictly observe the restrictions as follows for the allowable load on the arm.

CAUTION

If a load above the specified range is applied to the robot, this can result in deteriorated operational functionality or service life. If an amount other than the rated load will be applied, consult with Kawasaki.

For both JT2 and JT3, limit the total load torque on the wrist tip and arm so as not to exceed the maximum allowable load torque. The load torque can be calculated using the formula below.

Calculation formula
MXP360L 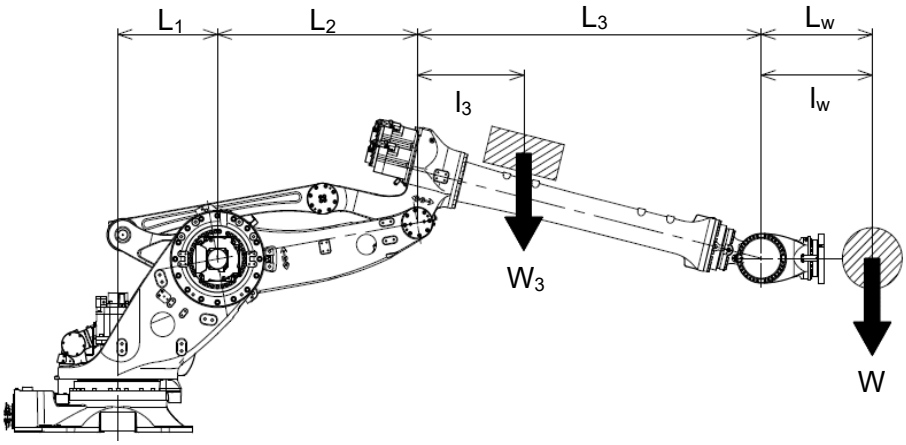
MXP410X 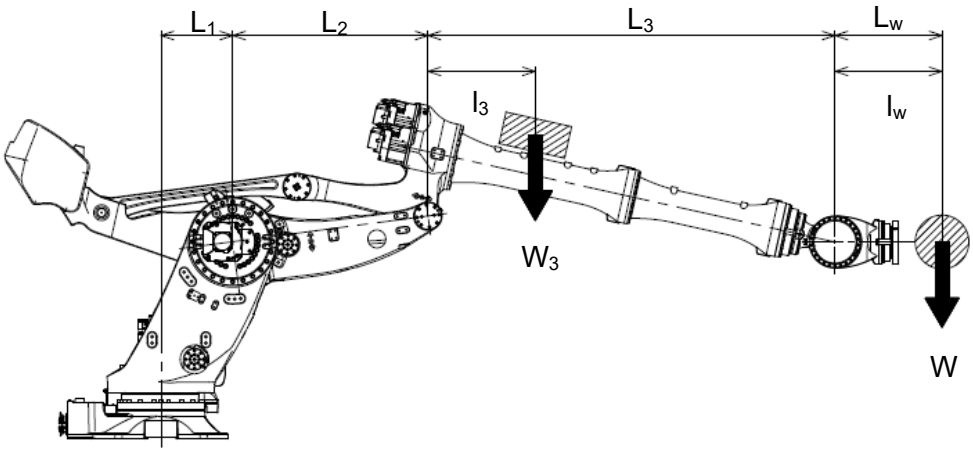

MXP710L

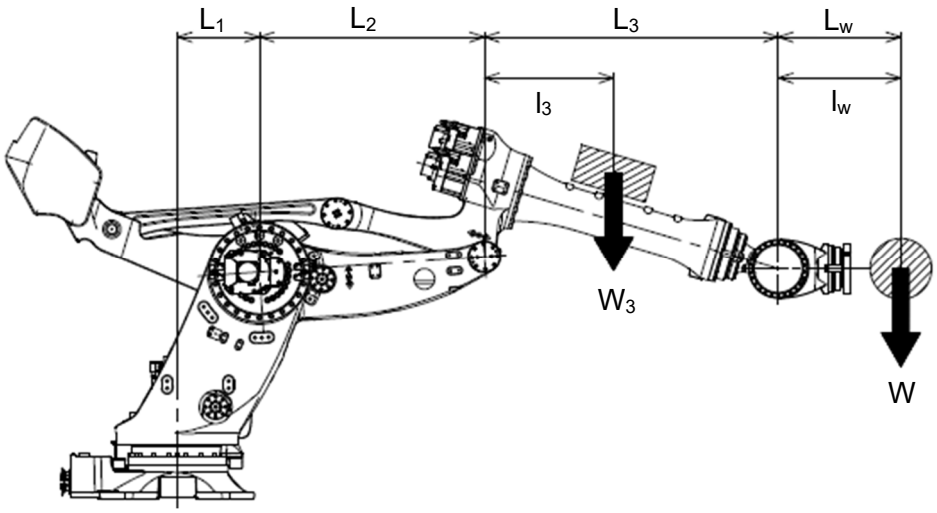

- JT3: $W (L_3+l_w) + W_3 \cdot l_3 \leq W_{max.} (L_3+L_W)$
- JT2: $W+W3 \leq Wmax$

W_{max}: Maximum allowable load [kg]
W: Load on wrist tip [kg]
W_3: Total load on upper arm [kg]
l_W: Position of wrist load center of gravity [mm]
l_3: Position of center of gravity of total load on upper arm [mm]

Use the values shown in the table below for the calculation.

	L_1 [mm]	L_2 [mm]	L_3 [mm]	L_w [mm]	W_{max} [kg]
MXP360L	500	1,020	1,720	651	360
MXP410X	400	1,100	2,250	747	410
MXP710L	400	1,100	1,175	647	710

However, ensure that the value of W_3 satisfies the following inequality.
$W (L_1+L_2+L_3+l_w) + W_3 (L_1+L_2+l_3) \leq W_{max} (L_1+L_2+L_3+L_W)$

CAUTION

When shipped, W_3, W, l_3, and l_w are the default settings. When using the robot for the first time, or when changing the load mass or load center of gravity position, be sure to set W_3, W, l_3, and l_w using the auxiliary functions 0304 and 0404. Operating the robot with incorrect settings may cause vibrations in motion, degradation of movement performance, and shortening of robot service life.

[NOTE]

After setting the load correctly, if you still want to suppress vibrations even more for application, decrease the acceleration/deceleration speed by modifying the taught points.

Appendix 1 Stopping Performance of Robot

This robot is controlled by the stopping method prescribed in the standard IEC 60204-1. In this section, the stopping distance or angle and the stopping time by categories are shown.
The stopping distance or angle and the stopping time are based on Annex B of ISO 10218-1 standard.

Stopping distance (angle):	The distance or angle until the robot comes to a complete stop after the stop command is given
Stopping time:	The time until the robot comes to a complete stop after the stop command is given

Calculate the stopping distance from the stopping angle of each axis considering stopping category, load, speed, extension and workpiece size shown in this section, and perform appropriate risk assessments. The values shown in this section may be different from the actual stopping distance or angle and the stopping time depending on the influence inside and outside the robot and the motion and posture at stop, so check the values before use. Avoid operation that requires frequent emergency stop by category 0. Doing so may cause the robot malfunction.

1. Definition of terms
   Load: Loading mass on flange section
   Speed: Speed of robot
   Extension: Distance from JT1 center of rotation to TCP (tool center point)

2. JT1/JT2/JT3 stopping angle and stopping time in category 0
   [Measurement conditions]
   Load: Maximum load
   Speed: Maximum speed
   Extension: Maximum extension

■MXP360L

Axis	Stopping angle [deg]	Stopping time [sec]
JT1	28.2	1.0
JT2	17.7	0.5
JT3	15.8	0.6

■MXP410X

Axis	Stopping angle [deg]	Stopping time [sec]
JT1	81.1	2.2
JT2	15.8	0.6
JT3	16.5	0.9

■ **MXP710L**

Axis	Stopping angle [deg]	Stopping time [sec]
JT1	9.9	0.8
JT2	2.6	0.2
JT3	9	0.5

3. JT1/JT2/JT3 stopping angle and stopping time in category 1
   The stopping angle and the stopping time are values for each combination when load, speed, and extension are at 33%, 66%, and 100%, respectively.

- Extension diagram

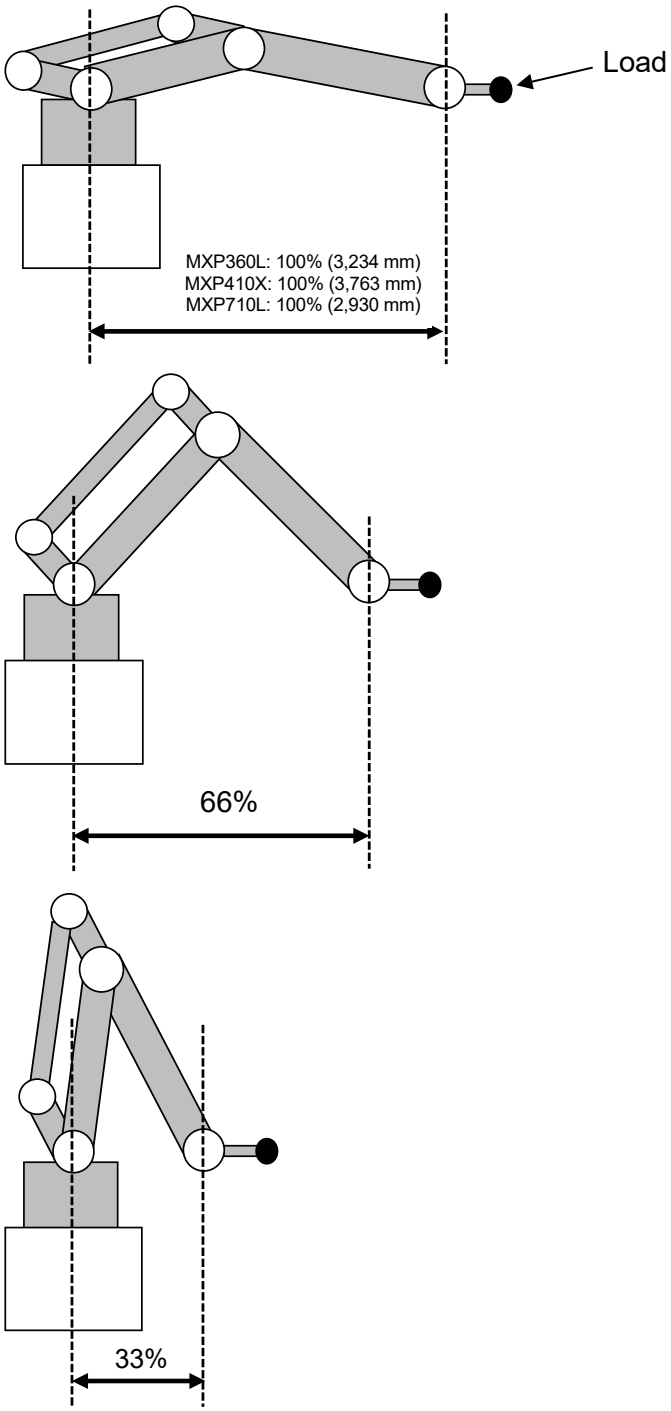

■Stopping angle and stopping time

MXP360L

- Stopping angle and stopping time in category 1: JT1

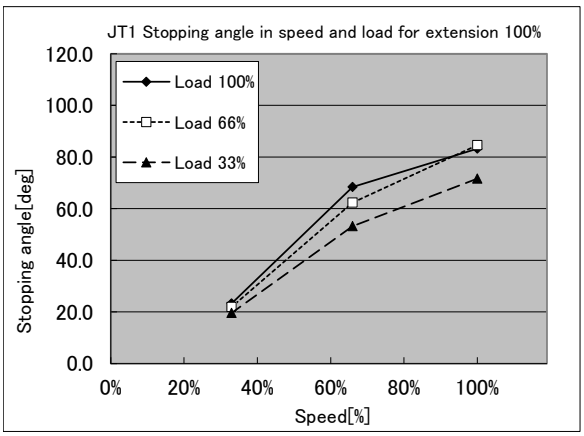

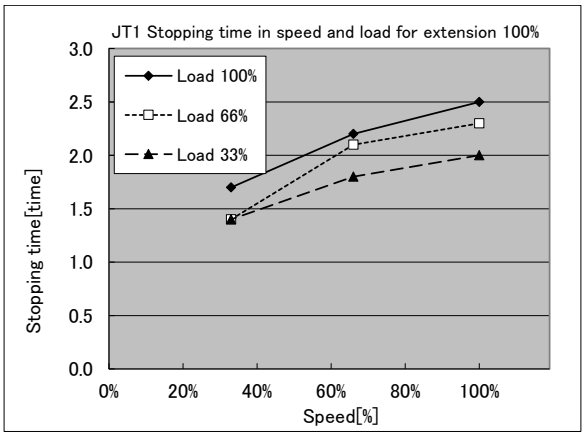

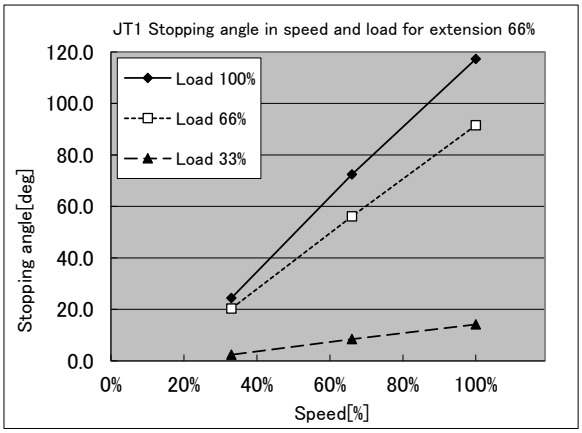

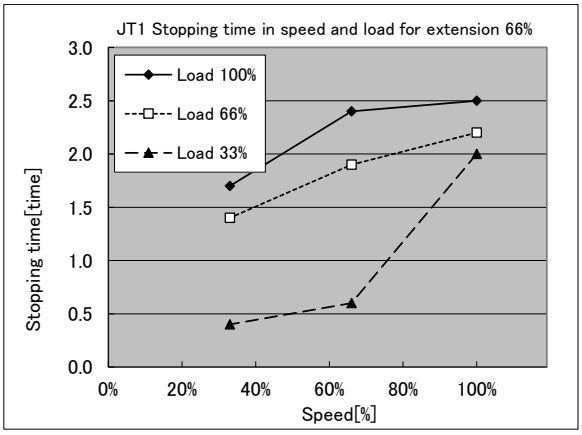

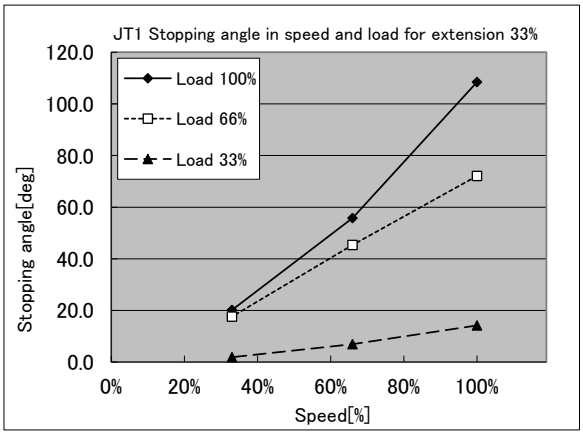

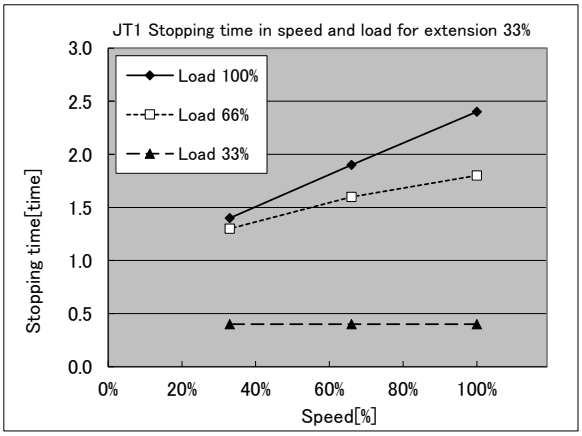

- Stopping angle and stopping time in category 1: JT2 (posture 100% only)

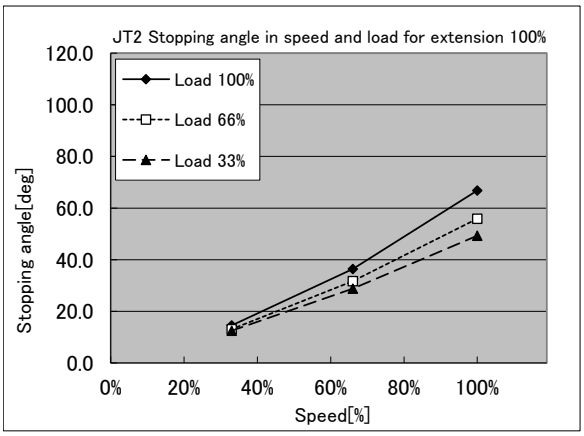

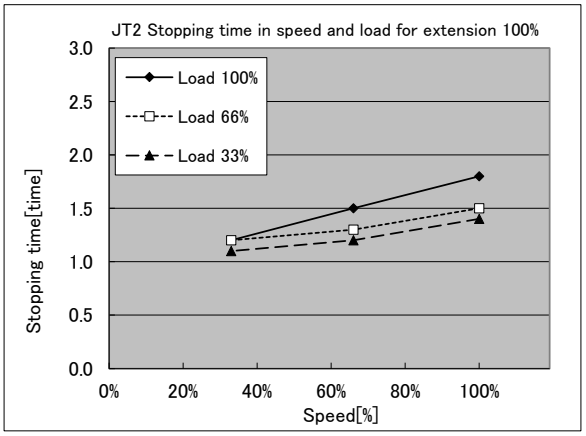

- Stopping angle and stopping time in category 1: JT3 (posture 100% only)

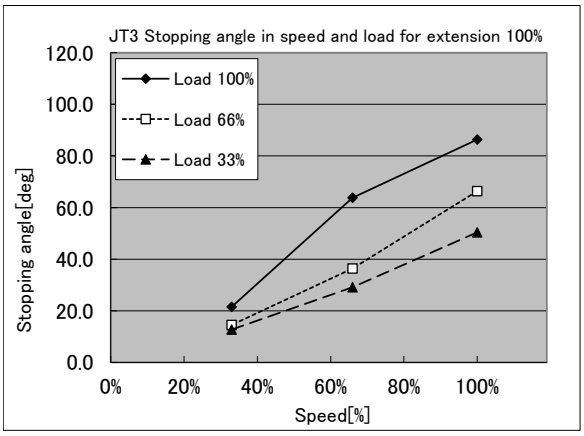

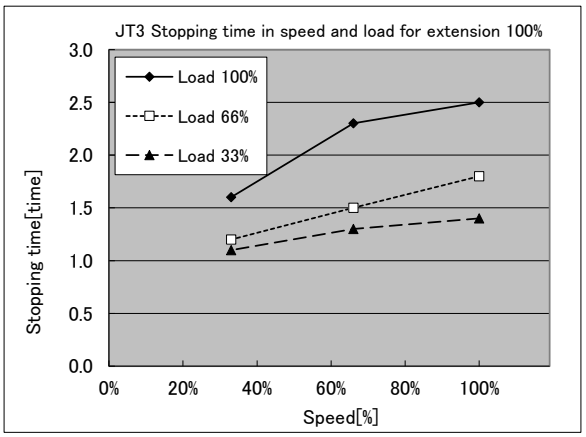

MXP410X

- Stopping angle and stopping time in category 1: JT1

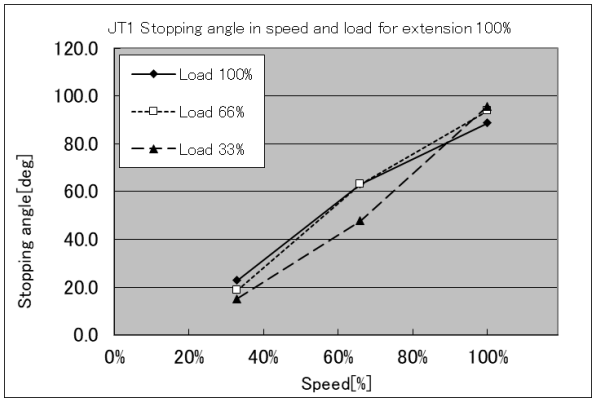

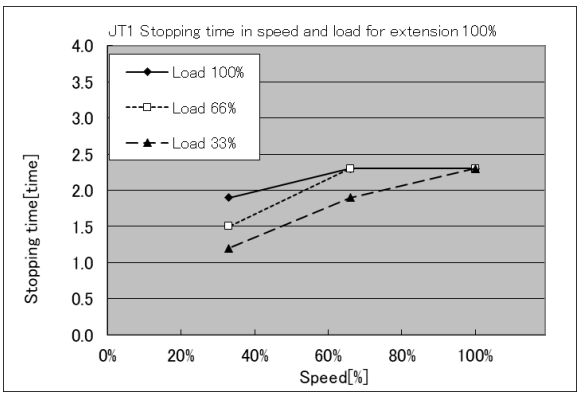

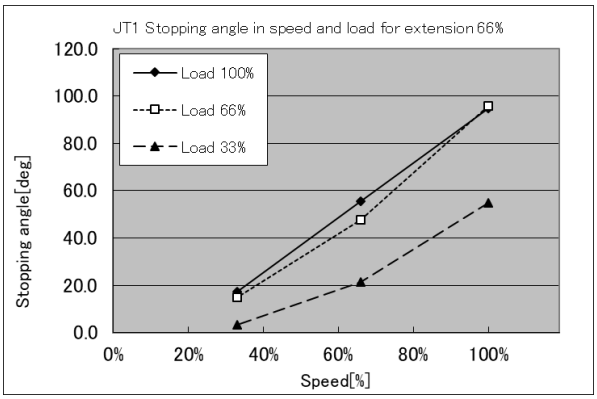

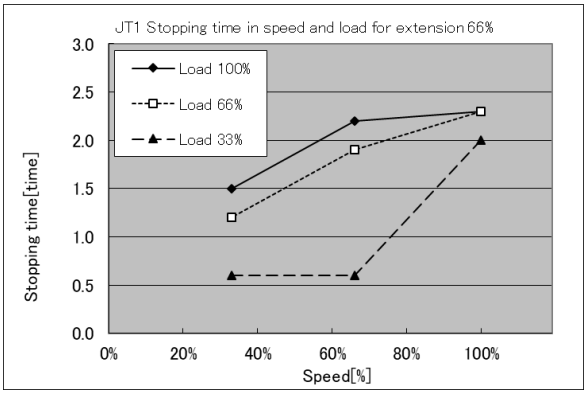

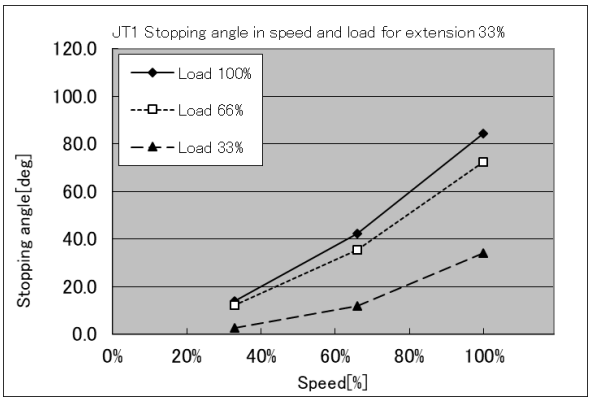

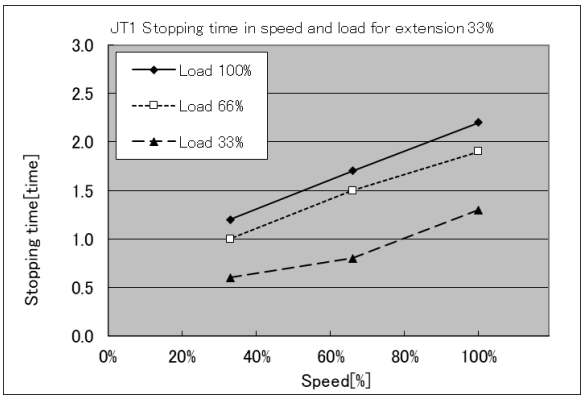

- Stopping angle and stopping time in category 1: JT2 (posture 100% only)

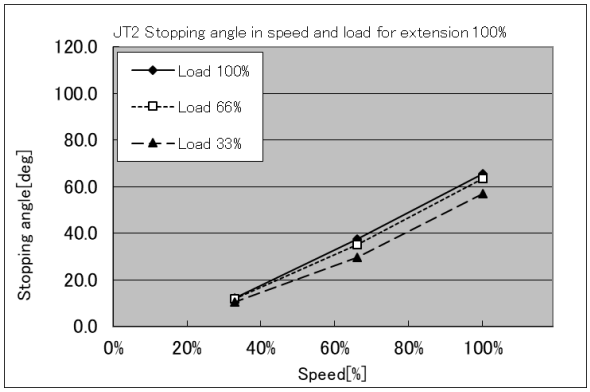

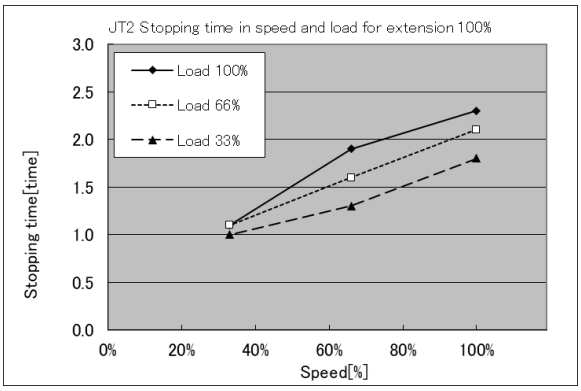

- Stopping angle and stopping time in category 1: JT3 (posture 100% only)

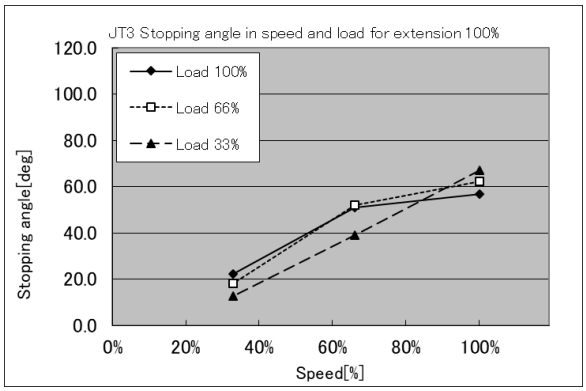

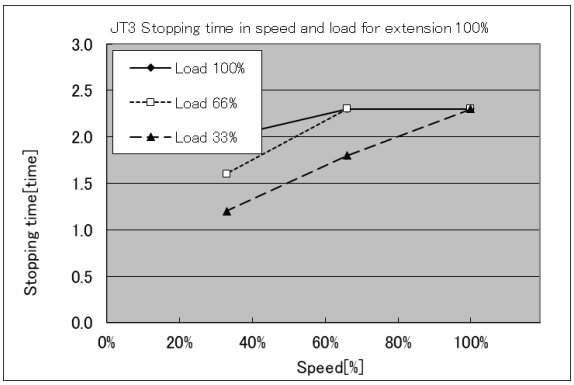

MXP710L

- Stopping angle and stopping time in category 1: JT1

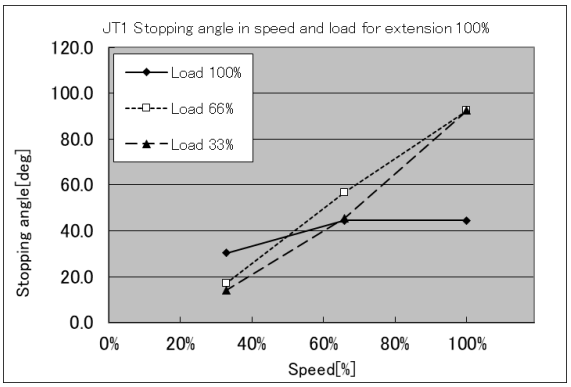

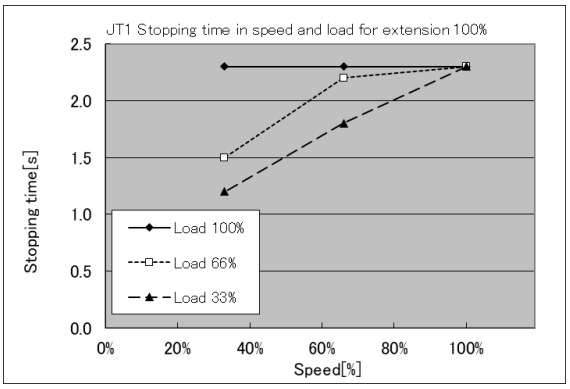

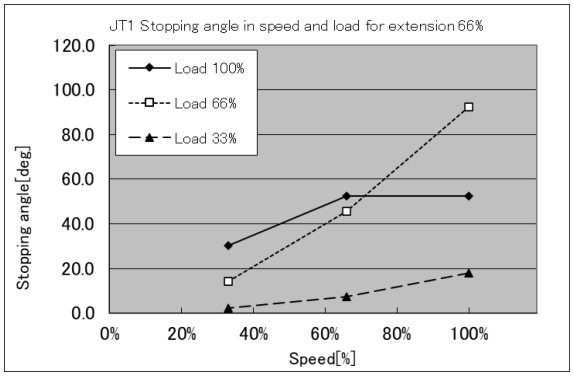

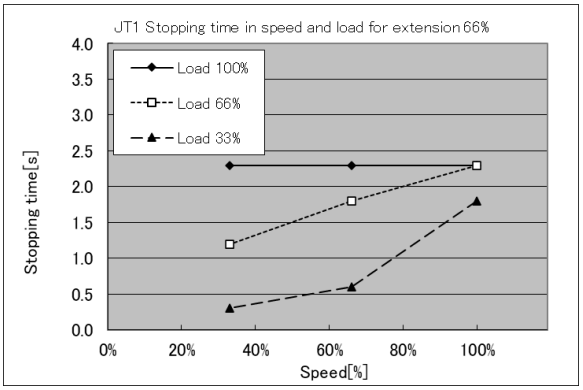

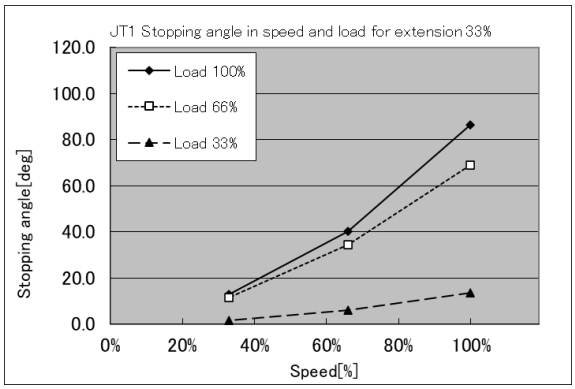

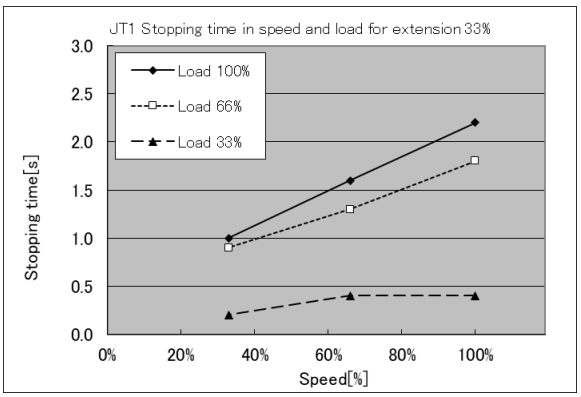

- Stopping angle and stopping time in category 1: JT2 (posture 100% only)

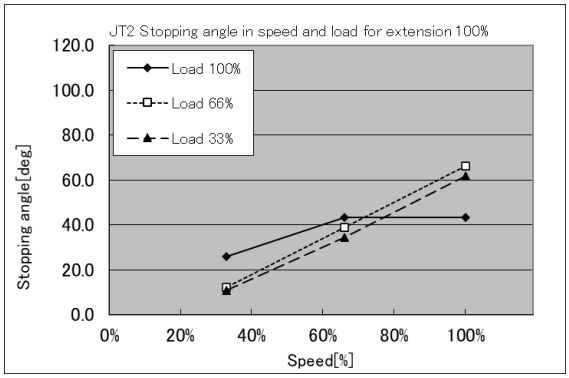

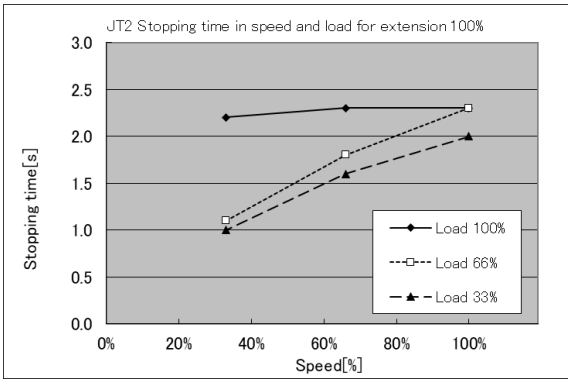

- Stopping angle and stopping time in category 1: JT3 (posture 100% only)

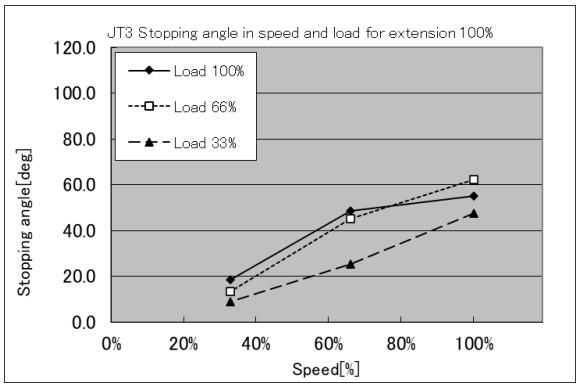

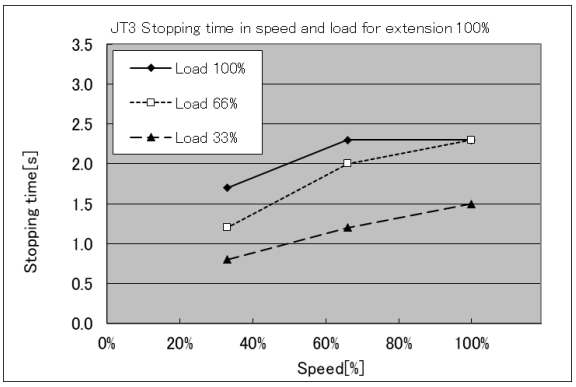

Kawasaki Robot MXP Series

Installation and Connection Manual

2022-10 : 1st Edition

2026-05 : 6th Edition

Publication : Kawasaki Heavy Industries, Ltd.

90202-1276DEF

Copyright © 2022 Kawasaki Heavy Industries, Ltd. All rights reserved.