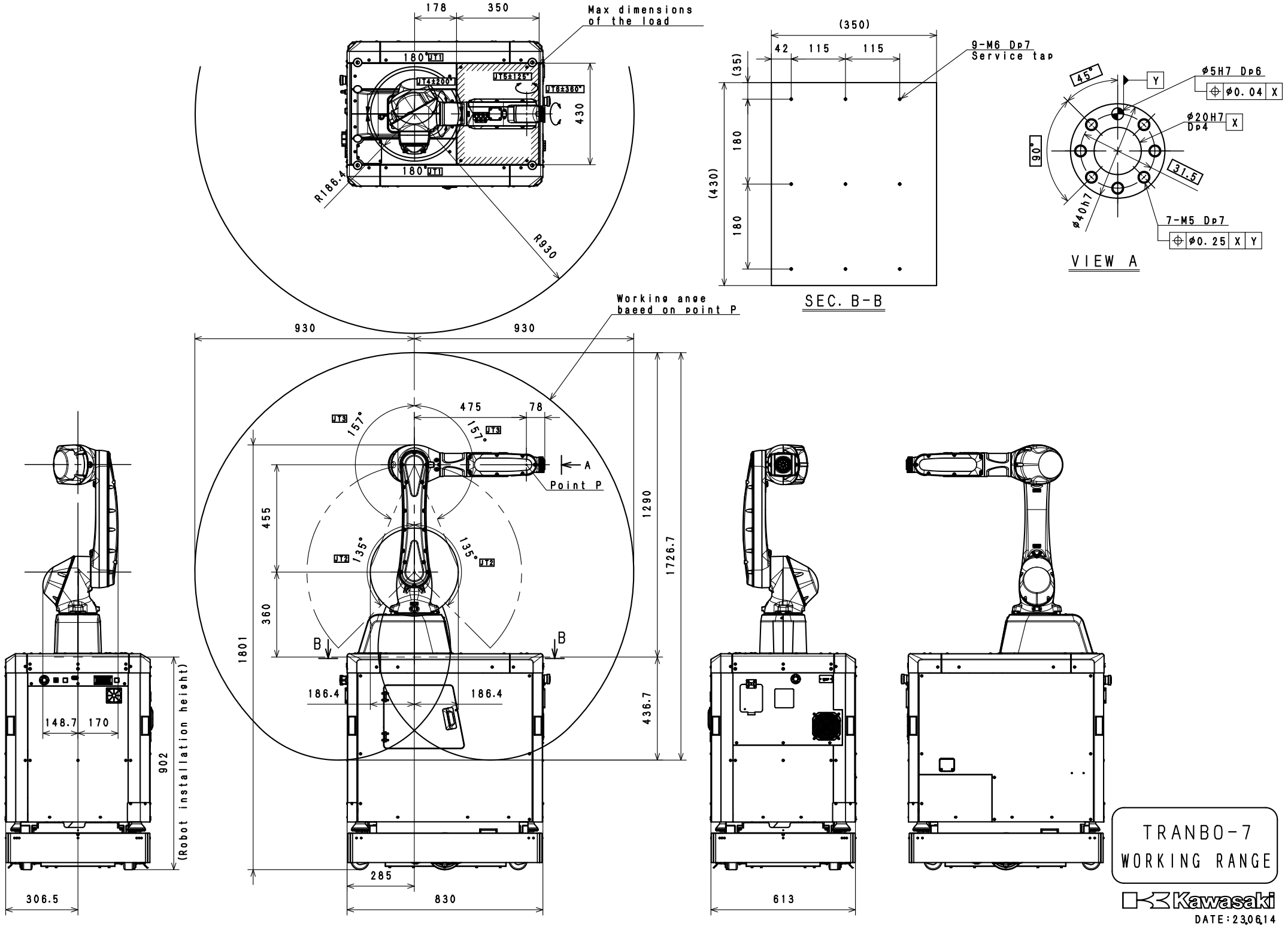
178
350
Max dimensions of the load
180° UT1
UT4±200°
UT5±125°
UT6±360°
430
180° UT1
R186.4
R930
(350)
42
115
115
9-M6 Dp7
Service tap
(35)
180
180
(430)
SEC. B-B
45°
Y
ϕ5H7 Dp6
ϕ0.04 X
ϕ20H7
Dp4
X
90°
31.5
ϕ40h7
7-M5 Dp7
ϕ0.25 X Y
VIEW A
Working ange
baeed on point P
930
930
475
78
UT3
157°
157°
UT3
A
Point P
455
1290
1726.7
135°
135°
UT2
UT2
360
1801
B
B
186.4
186.4
436.7
148.7
170
902
(Robot installation height)
285
306.5
830
613
TRANBO-7
WORKING RANGE
Kawasaki
DATE:23.06.14