Kawasaki Robotics

Standard Specifications

RF007L-B01x

1st ed. 2023/Aug/22

Kawasaki Heavy Industries, Ltd.
Robot Business Division

Specification number : 90151-0420DEA

Materials and specifications are subject to change without notice.

Robot specifications

1. Model	RF007L-B01x
2. Type	Articulated robot
3. Degree of freedom	6 axes
4. Max. payload	7 kg
5. Max. reach	930 mm
6. Position repeatability	±0.032 mm (wrist flange surface) conforms to ISO 9283

7. Axis specification

Operating axis	Motion range	Max. speed[*1]
Arm rotation (JT1)	±180 °	360 °/s
Arm out-in (JT2)	±135 °	305 °/s
Arm up-down (JT3)	±157 °	400 °/s
Wrist swivel (JT4)	±200 °	550 °/s
Wrist bend (JT5)	±125 °	550 °/s
Wrist twist (JT6)	±360 °	900 °/s

Note[*1] The values in the table are maximum values and vary depending on conditions such as load and motion range

8. Load capacity of wrist

	Max. torque	Moment of inertia*2
JT4	17.0 N·m	0.50 kg·m^2
JT5	17.0 N·m	0.50 kg·m^2
JT6	10.0 N·m	0.20 kg·m^2

Note[*2] Each value in this table shows allowable moment of inertia of JT4/JT5/JT6 when max. allowed torque is applied to each axis. If more detailed data is required for your application, please contact Kawasaki.

9. Mass	36 kg (without options)	
10. Mounting	Floor or Ceiling mounting	
11. Installation Environment	Ambient Temperature:	0 - 40 °C
	Relative Humidity:	35 - 85 % (with no dew condensation)
12. Color	Munsell 10GY9/1 equivalent (Epoxy paint)	
13. Degree of protection	IP67 equivalent	
14. Built-in utilities	Pneumatic piping (ϕ6 × 1 lines)	
15. Lubricants	Food-grade lubricants (NSF H1 Registered)	
16. Options	Option harness *3	Sensor harness (8 circuits)
		LAN harness (CAT5e, straight)
		External axis harness through wrist (motor/signal)
		External axis harness through base (motor/signal)
		Type D0 (I/O through harness)
	Solenoid valve	Double solenoid / Single solenoid valves (3 units max.)
	Air cleaning	Filter, Regulator, Mist separator
	Mechanical stopper	Adjustable stopper JT1
	Servo on lamp	Comply with UL (Lamp color: yellow)

*3: Not all option harness can be selected. Consult Kawasaki.

Consult Kawasaki about maintenance parts and spare parts.

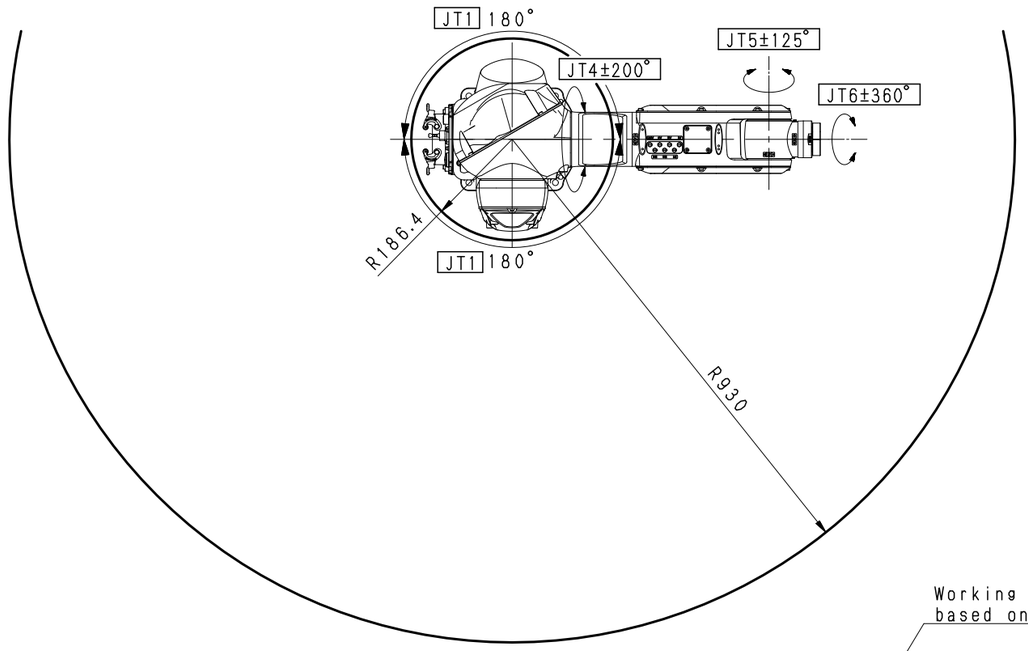

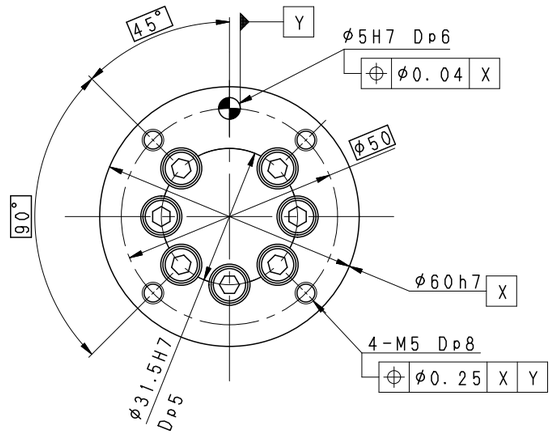

VIEW A

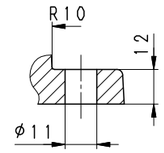

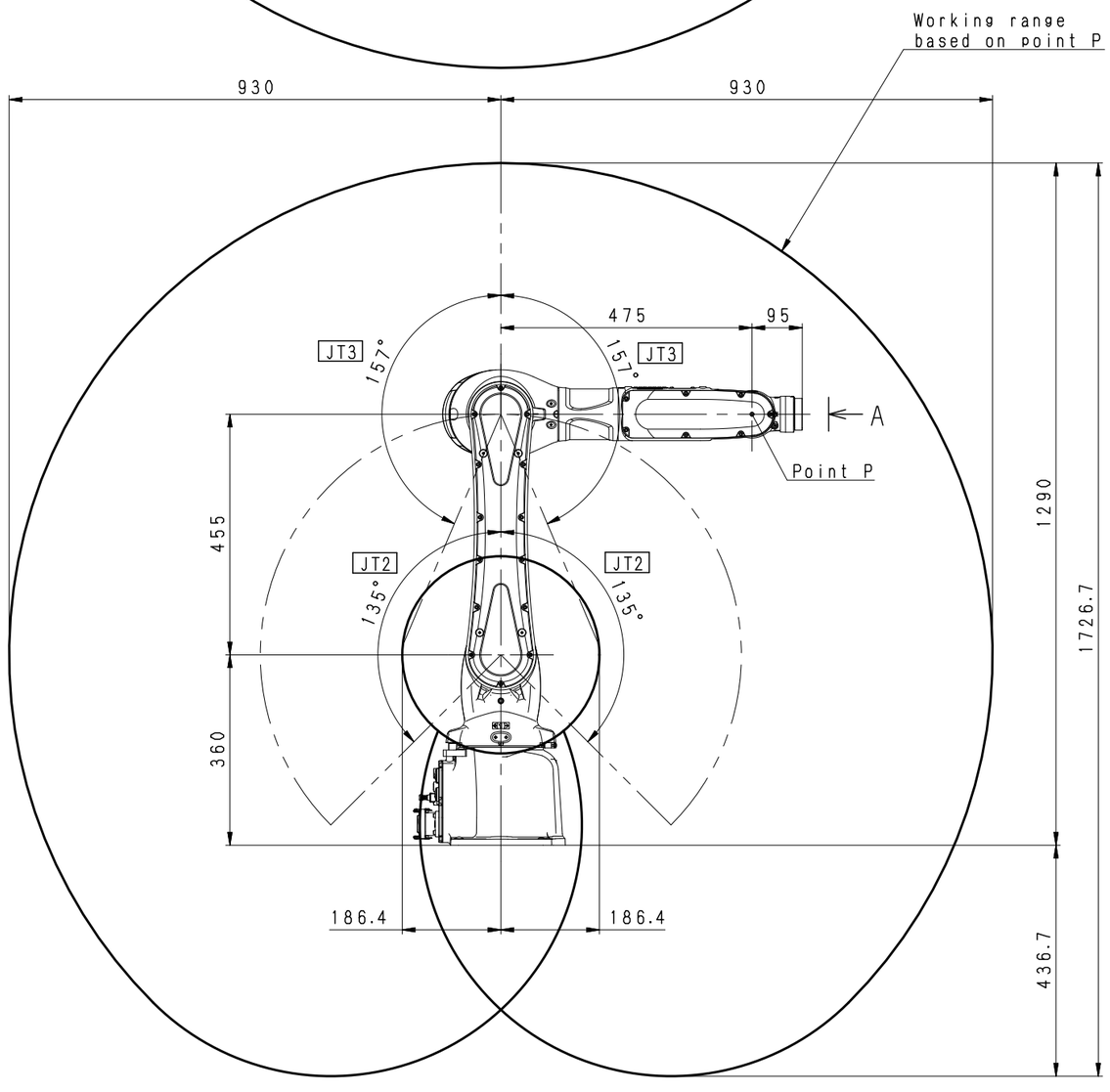

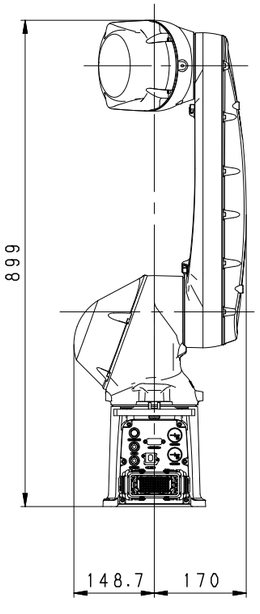

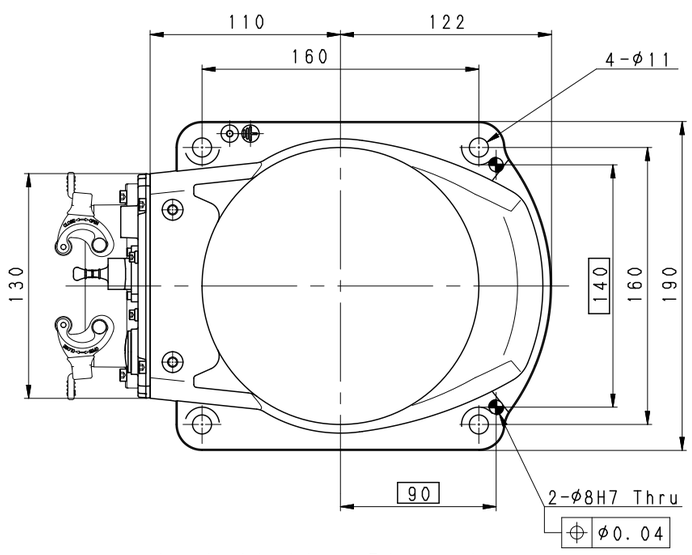

Installation Dimensions

RF007L-B
WORKING RANGE

Kawasaki

DATE : 23,06,08